IDEA

TECHNICAL SPECIFICATIONS FOR OPENING AND COLLECTING ROOF SYSTEM

1) Aluminum profiles used in the system are 6063 – T6 F25 (7580 Briner Hardness).
2) All Profiles come to the construction site as Electro Static oven painted and packaged.
3) All accessories come packaged as galvanized and electrostatic oven paint
4) Movable roof cover is Aluminum metal.
5) Panels work axially and have the ability to move back when requested. (This feature is It is important in terms of making ventilation and shading at the same time)
6) Panels should be able to be opened at a minimum angle of 105 degrees axially. (It is important to cut the sunlight coming from the facade)
7) Groove detail is Aluminum and does not protrude. The water goes out from the carrier feet.
8) The opening-closing movement of the ceiling cover should be provided by the remote control control
9) It should be integrated with the automation system to prevent misuse.
10) The system to be used is designed and produced in accordance with all seasonal conditions
11) The timing belt provides power transmission between the engine and the moving mechanism and is adjustable.
12) Vertical carrier profiles are 16 cm x 14 cm Aluminum.
13) Flange application screws are M8 * 80 Buldex or M8 * 80 Jacketed Steel dowel and galvanized coating. (In order not to damage the floor insulation)
14) The wicks to be used in the system are EPDM.
15) Silicones to be used are Neutral silicone.
16) Assembly teams are the company's own, paid, insured team.
17) The system to be used has 2 (two) years of engine and 2 years of mechanical warranty.
18) Horizontal carrier profiles consist of 12 cm x 18 cm.
19) System modules have static properties to meet 50kg+25kg /m² distributed load and 50kg/m² wind load.
20) Thanks to the special panels used in the system modules, it will perform the ventilation in rainy weather.
It has been designed in such a way that it has rain mode in control by remote.
21) The axial movement of the aluminum panels in the system is provided by separate motors and the recoiling movement is provided by separate motors.
22) The system can work both straight and inclined

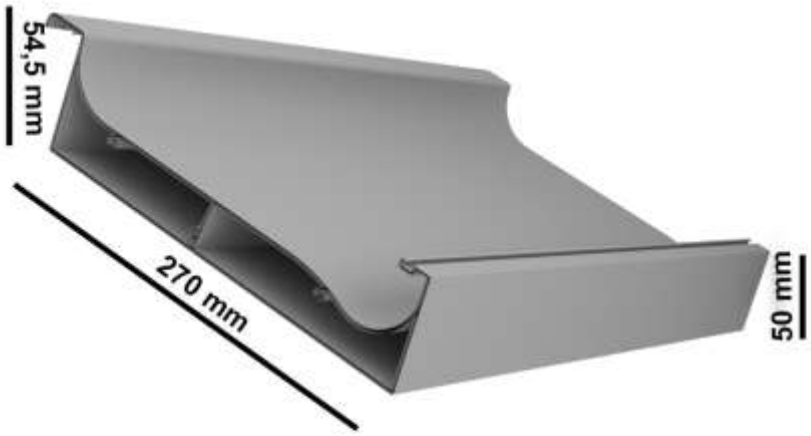

kalınlık
thickness : 2 mm

kalınlık
thickness : 2.5 mm

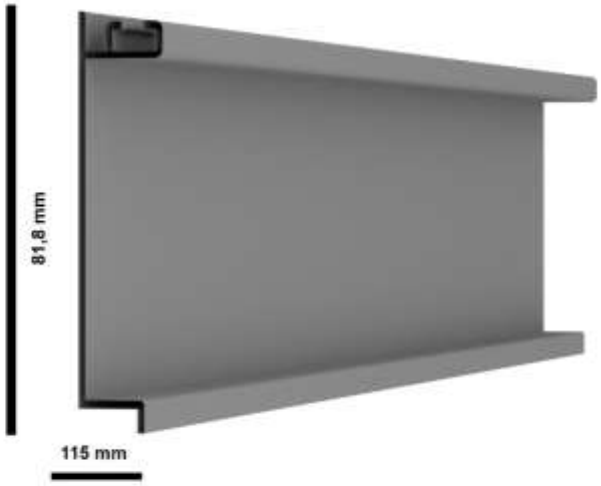

kalınlık
thickness : 2,mm

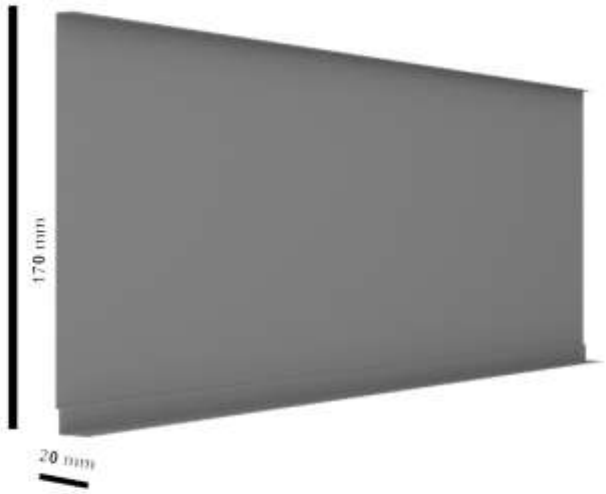

kalınlık
thickness : 2 mm

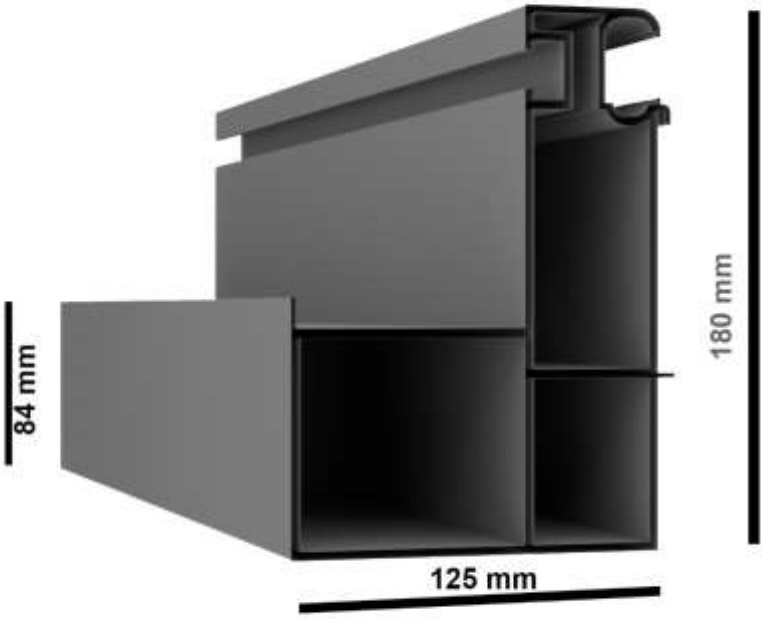

kalınlık
thickness : 3 mm

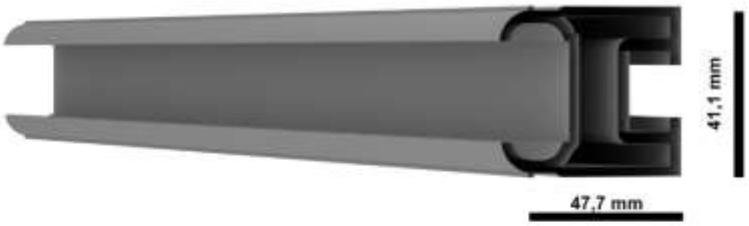

kalınlık
thickness : 2 mm

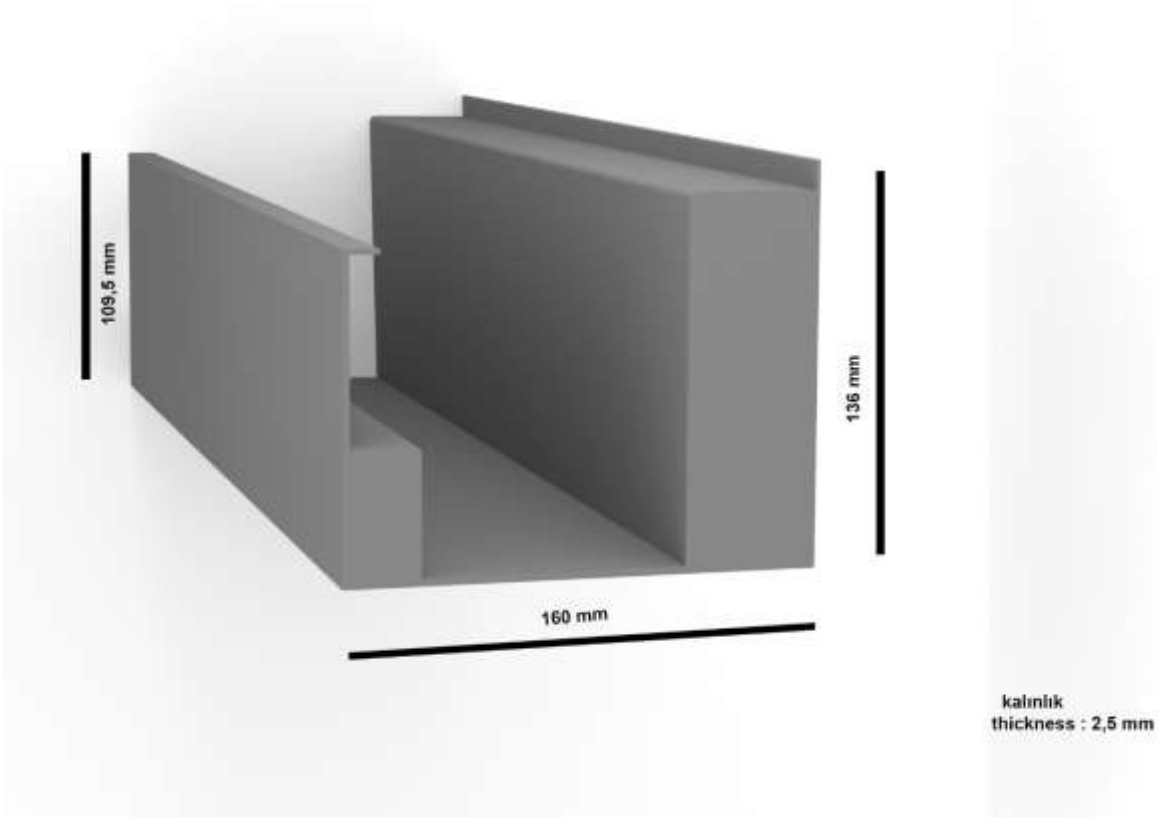
109,5 mm
136 mm
160 mm
kalınlık
thickness : 2,5 mm

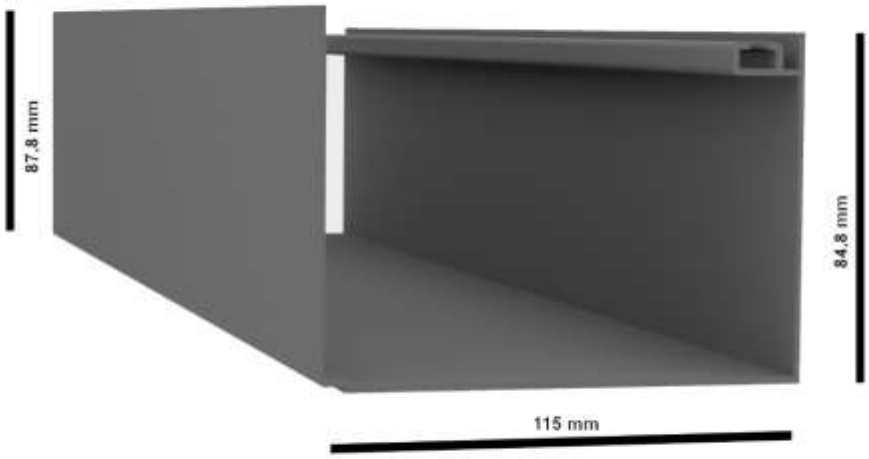
87,8 mm
84,8 mm
115 mm
kalınlık
thickness : 2 mm

- LAMELS CAN BE OPENED UP TO 105 DEGREES WITH TWO LINEAR MOTORS.
- • IT CAN WORK WITH TWO LINEAR MOTORS UP TO 25 m2. FOUR LINEAR MOTORS MUST BE USED AFTER 25 m2.
- • THE LAMELS ARE UP FIRST WITH THE CONTROL, THEN COLLECTED TO THE BACK.
- • THE SYSTEM CANNOT WORK FLAT OR INCLINED.
- • MAXIMUM MEASUREMENT FOR A SINGLE SYSTEM IS 45 m2
- • INSULATION MATERIAL CAN BE ADDED INTO THE LAMELS.
- • THE SYSTEM CAN BE LIGHTED FROM FOUR AROUNDS WITH LED LIGHTING.
- • IT IS COMPLETELY WATERPROOF.

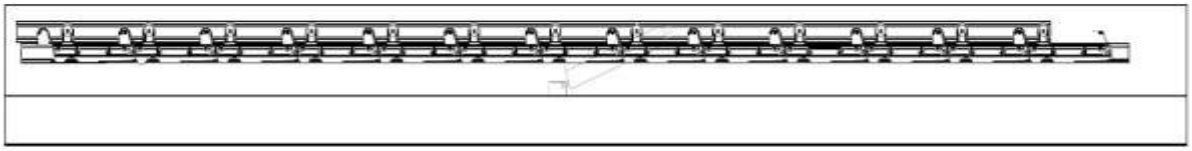

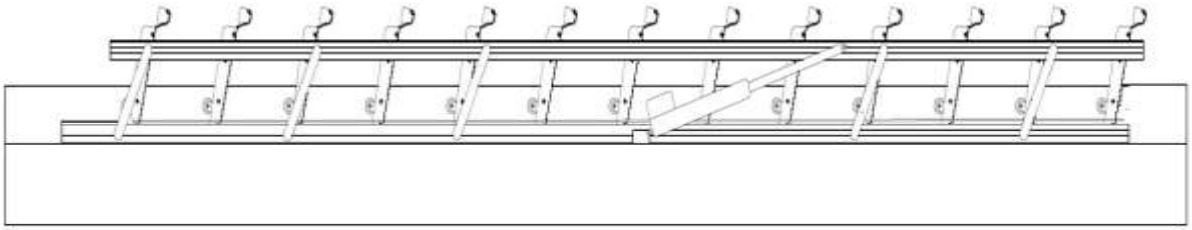

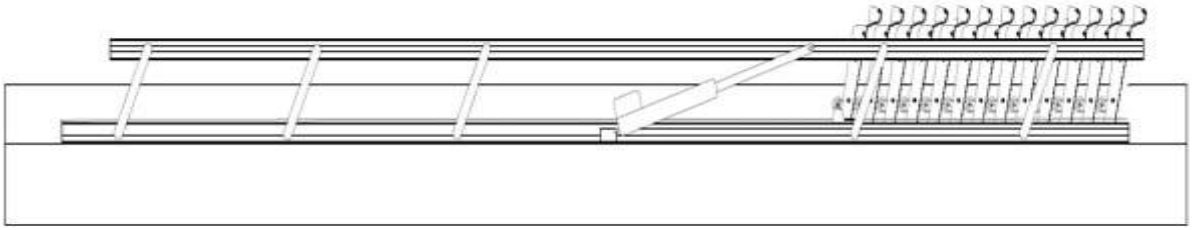

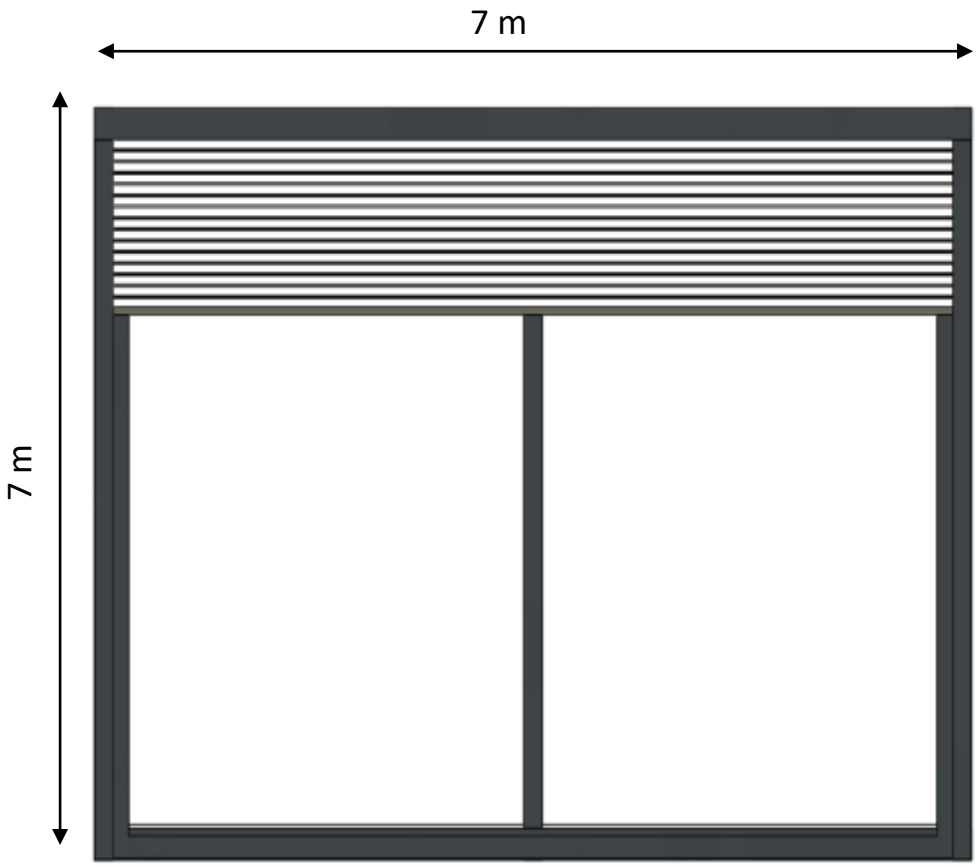
7 m
7 m

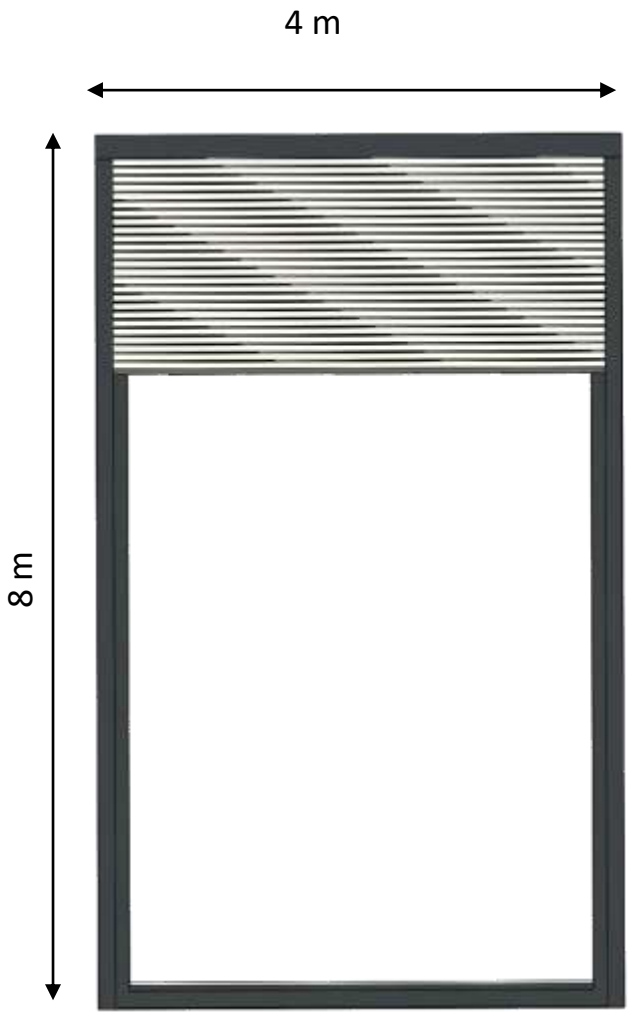
4 m
8 m

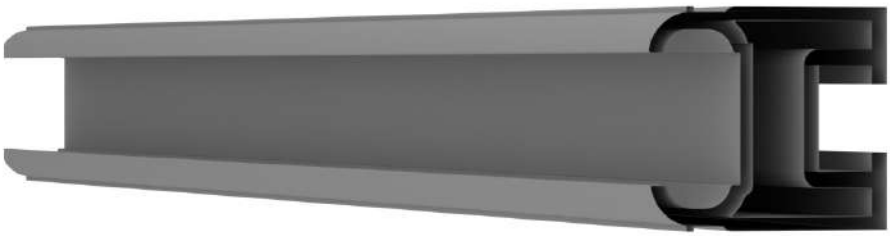

ALÜMİNYUM KÜÇÜK RAY
ALUMINUM SMALL RAIL

ALÜMİNYUM AYAK
ALUMINUM POST

ALÜMİNYUM RAY RPOFİLİ
ALUMINUM BIG RAIL

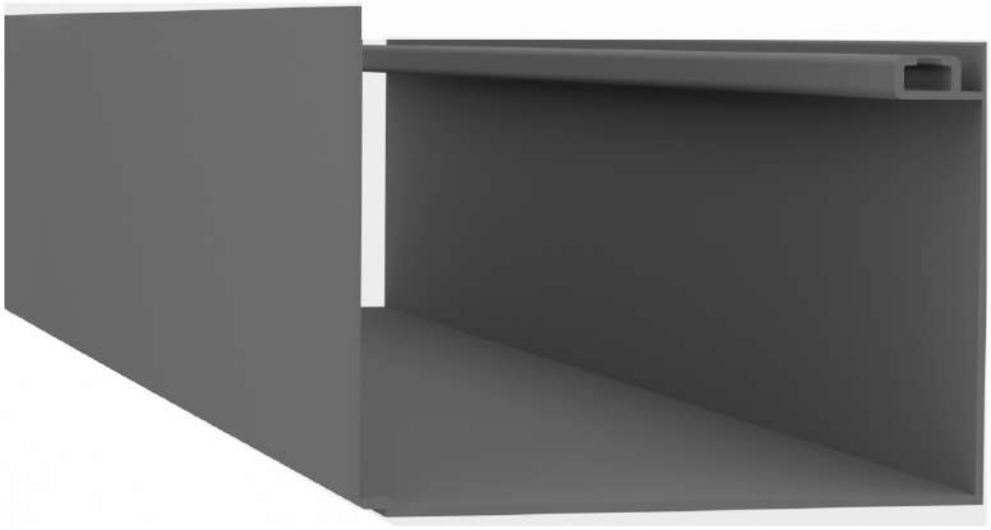

ALÜMİNYUM KÜÇÜK OLUK
ALUMINUM SMALL GUTTER

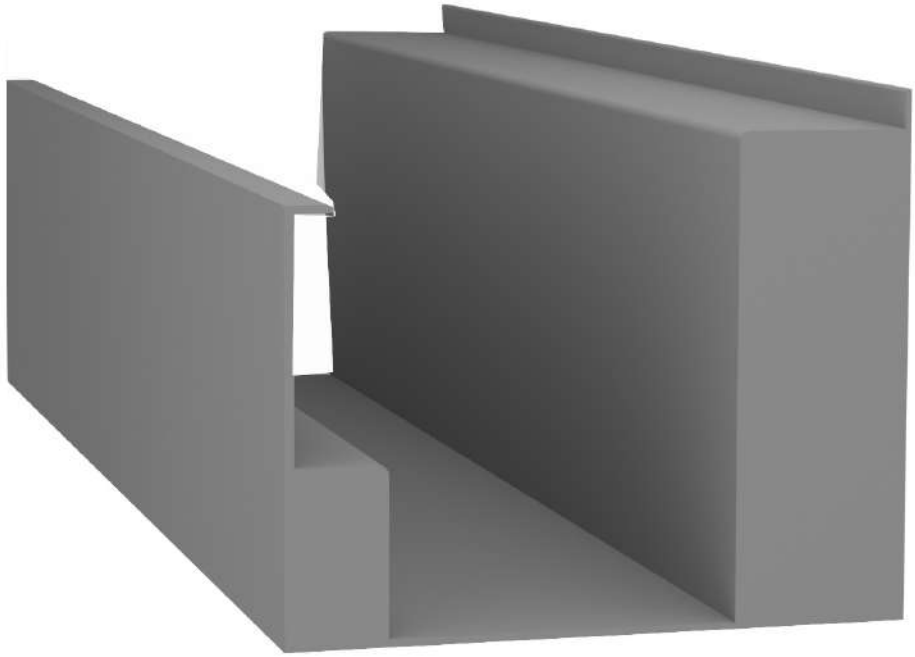

ALÜMİNYUM BÜYÜK OLUK

ALUMINUM SMALL RAIL

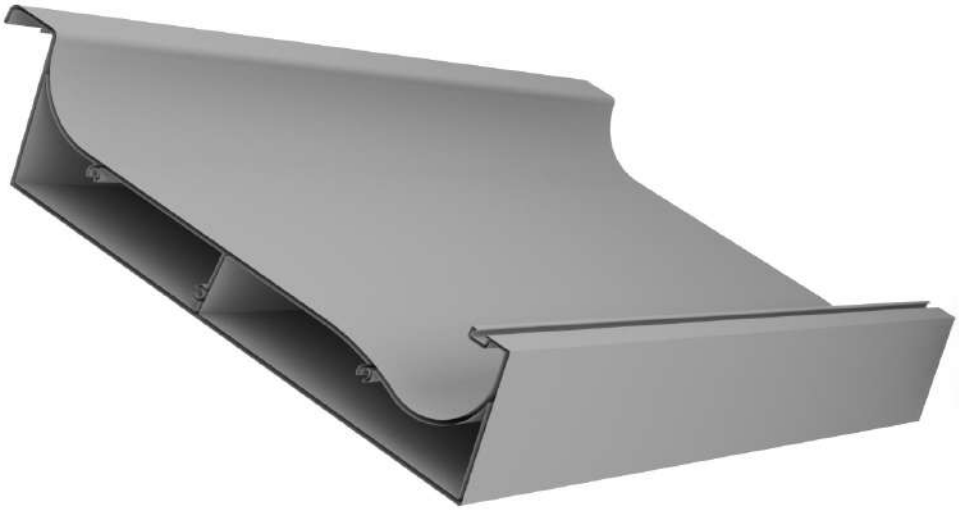

ALÜMİNYUM LAMEL
ALUMINUM LAMEL

ALÜMİNYUM OLUK EK PROFİLİ
ALUMINUM GUTTER ADDITIONAL PROFILE

ALÜMİNYUM ÖN CONTA PROFİLİ
ALUMINUM FRONT GASKET PROFILE

GENERAL STRUCTURE SETTLEMENT DIAGRAMS

ZEMİN KAT

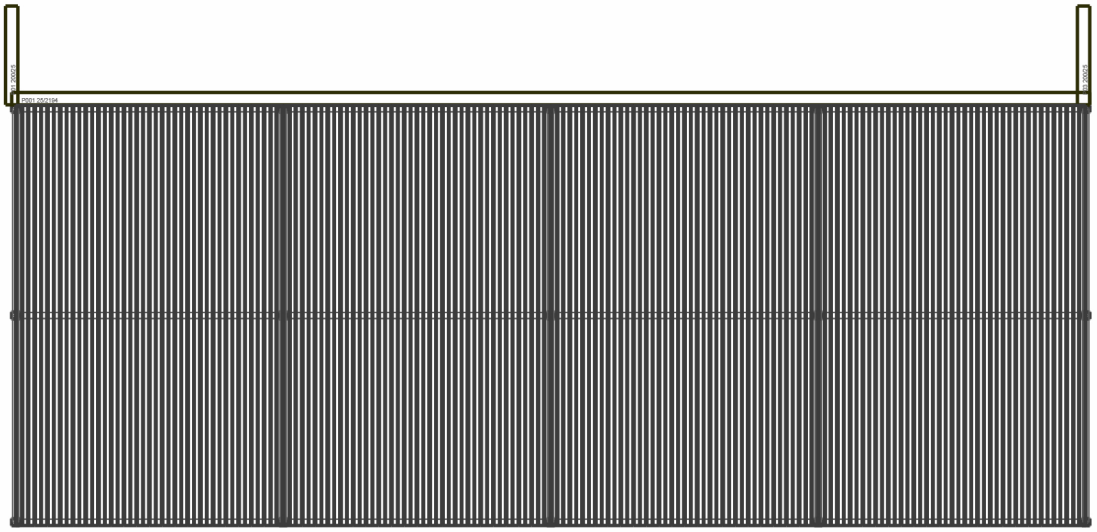

STRUCTURE GENERAL INFORMATIONS

STRUCTURE LOCATION INFORMATIONS

Structure Province	:	
Structure District	:	
Structure Pipe Tap No	:	
Structure Urban Block No	:	
Structure Lot No	:	
Latitude	:	41.062340
Longitude	:	28.974084

STRUCTURE GEOMETRY INFORMATIONS

Story Count	:	1
Building Height	:	2.70 (m)
Building Height Over Rigid Story	:	2.70 (m)
Rigid Basement Story Count	:	0
Rigid Basement Story Number	:	-1
Maximum Story Height	:	2.70 (m)
Maximum Beam Length	:	0 (m)
Intended Use	:	
Rigid Diaphragm Count	:	0

SEISMIC PARAMETERS

Building Importance Coefficient (I)	:	1
Frame Behaviour Factor (Entered) (X / Y)	:	4 / 4
Frame Behavior Factor (Selected) (X / Y)	:	4 / 4
Additional Eccentricity Ratio	:	0.05
Ductility [X / Y]	:	High / High
Quake Zone	:	1
Effective Ground Acceleration Coefficient	:	0.40

GROUND PARAMETERS

Soil Type	:	S1
Spectrum Characteristic Periods	:	Ta : 0.100, Tb : 0.300
Admissable Ground Stress	:	60.00 [tf/m²]
Modulus of Subgrade Reaction	:	2500.00 [tf/m³]
Soil Group	:	A

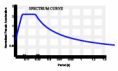

MATERIAL INFORMATIONS

Shearwalls	:	C25 B420C
Steel Elements	:	MAT1
Material Name	:	C25 B420C
Characteristic Conc. Comp. strength	:	25 Mpa
Characteristic Conc. Tensile Strength	:	1750000 N/m²
Concrete Safety Factor	:	1.5
k1 Constant	:	0.85
Bending Reinforcement Yield Stress	:	420 Mpa
Shear Reinforcement Yield Stress	:	420 Mpa
Steel Safety Factor	:	1.15
Modulus of Elasticity	:	3084641.544 N/m²
Shear Modulus	:	1285267.31 N/m²
Poisson's Ratio	:	0.2
Unit Weight	:	2.5 N/m³
Coeff. of Thermal Expansion	:	1E-05
Material Name	:	MAT1
Steel Yield Strength (Fy)	:	160 Mpa
Steel Ultimate Strength (Fu)	:	195 N/m²
Modulus of Elasticity	:	7.158 N/m²

MATERIAL INFORMATIONS

Shear Modulus	:	2.753 N/m²
Poisson's Ratio	:	0.3
Unit Weight	:	0.00275323 N/m³
Coeff. of Thermal Expansion	:	2.3E-06
Material Name	:	AL
Modulus of Elasticity	:	6607760.88 N/m²
Shear Modulus	:	2541446.492 N/m²
Poisson's Ratio	:	0.3
Unit Weight	:	2.7 N/m³
Coeff. of Thermal Expansion	:	0.00025

USED CODE AND REGULATIONS

TS 500 (February 2000)
TBDY 2007
ÇYTHYEDY (GKT)

MODELING CONCRETE CRACKED SECTION PROPERTIES WITH STIFFNESS MODIFIERS

Shearwall - Slab (in plane)	Axial	Shear
Shearwall	0.50	0.50
Basement Shearwall	0.80	0.50
Slab	0.25	0.25

Shearwall - Slab (out of plane)	Bending	Shear
Shearwall	0.25	1.00
Basement Shearwall	0.50	1.00
Slab	0.25	1.00

1D Element	Bending	Shear
Coupling Beam	0.15	1.00
Beam	0.35	1.00
Column	0.70	1.00

LOAD CASES AND COMBINATIONS

Load Cases	Description
G	Dead load
Q	Live load
WX(+)	Wind loading on X direction
WX(-)	Wind loading on X direction
WY(+)	Wind loading on Y direction
WY(-)	Wind loading on Y direction
S	Snow
Ex	Seismic loading on X direction with eccentricity
Ey	Seismic loading on Y direction with eccentricity

Load Combinations	Use for Concrete Design	Use for Steel Design	Use for Soil Stress Check
1.4G+1.6Q	√		
G+Q			√
G+Q+Ex	√		√
G+Q-Ex	√		√
G+Q+Ey	√		√
G+Q-Ey	√		√
0.9G+Ex	√		√
0.9G-Ex	√		√
0.9G+Ey	√		√
0.9G-Ey	√		√
G+1.3Q+1.3WX(+)	√		√
0.9G+1.3WX(+)	√		√
G+1.3Q+1.3WX(-)	√		√
0.9G+1.3WX(-)	√		√
G+1.3Q+1.3WY(+)	√		√
0.9G+1.3WY(+)	√		√
G+1.3Q+1.3WY(-)	√		√
0.9G+1.3WY(-)	√		√
G+Q		√	
G+S		√	
G+0.75Q+0.75S		√	

Load Combinations	Use for Concrete Design	Use for Steel Design	Use for Soil Stress Check
G+WX(+)		√	
G+WX(-)		√	
G+WY(+)		√	
G+WY(-)		√	
G+0.75Q+0.75S+0.75WX(+)		√	
G+0.75Q+0.75S+0.75WX(-)		√	
G+0.75Q+0.75S+0.75WY(+)		√	
G+0.75Q+0.75S+0.75WY(-)		√	
0.6G+WX(+)		√	
0.6G+WX(-)		√	
0.6G+WY(+)		√	
0.6G+WY(-)		√	
G+0.7Ex		√	
G-0.7Ex		√	
G+0.7Ey		√	
G-0.7Ey		√	
G+0.75Q+0.525Ex+0.75S		√	
G+0.75Q-0.525Ex+0.75S		√	
G+0.75Q+0.525Ey+0.75S		√	
G+0.75Q-0.525Ey+0.75S		√	
0.6G+0.7Ex		√	
0.6G-0.7Ex		√	
0.6G+0.7Ey		√	
0.6G-0.7Ey		√	

BUILDING SUMMARY REPORT

Material and Section Controls		
Used Concrete Grade	Concrete used on project is at least C20 quality or better	√
Used Steel Grade	MAT1	
Section Control	All elements in project have adequate sections	√

Story Displacements and Irregularities		
TBDY 4.9.1 Limitation of Relative Story Displacements	Relative story displacement criteria satisfied for X direction.	√
	$\delta i(max)/h$ = 0.0020 $\leq$ 0.02 - (ZEMİN KAT)	
	Relative story displacement criteria satisfied for Y direction.	√
	$\delta i(max)/h$ = 0.0023 $\leq$ 0.02 - (ZEMİN KAT)	
	Relative displacement limits determination:	
	No flexible joints or joints, completely adjacent (4.9.1.3.a)	
Second Order Effects	Second order effects criteria is satisfied at all stories	√
	$\theta i(max)$ = 0.000 $\leq$ 0.12 - ()	
A1 - Torsional Irregularity	A1 Irregularity criteria is satisfied for all stories in X direction	√
	$\eta i(max)$ = 0.00 $\leq$ 1.2 - ()	
	A1 Irregularity criteria is satisfied for all stories in Y direction	√
	$\eta i(max)$ = 0.00 $\leq$ 1.2 - ()	
A2 - Floor Discontinuities	A2 Irregularity criteria is satisfied for all stories	√
A3 - Projections in Plan	A3 Irregularity criteria is satisfied for all stories	√
B1 - Interstory Strength Irregularity (Weak Story)	B1 Irregularity control is not essential for single story building. TBDY 3.6.2.3	√
B2 - Interstory Stiffness Irregularity (Soft Story)	B2 irregularity condition is provided for all stories in direction X.	√
	B2 irregularity condition is provided for all stories in direction Y.	√
B3 - Discontinuity of Vertical Structural Elements	B3 Irregularity criteria is satisfied for all stories	√
Earthquake Turnover Moment Control	Earthquake turnover moment control is satisfied for X direction	√
	0.00 / 0.00 = -nan(ind) < 0.5	
	Earthquake turnover moment control is satisfied for Y direction	√
	0.00 / 0.00 = -nan(ind) < 0.5	

Analysis Method and Choosing of R Coefficient		
Determination of R Factor (X axis)	Entered R coefficient is valid.	√
	Entered R = 4.00 Chosen R = 4.00	
Determination of R Factor (Y axis)	Entered R coefficient is valid.	√
	Entered R = 4.00 Chosen R = 4.00	
Determination of Analysis Method	Response spectrum method has been used	√
	Modal analysis has been done	
Determination of Ductility Level (X Direction)	Frame system - Ductility : NORMAL	√
Determination of Ductility Level (Y Direction)	Frame system - Ductility : NORMAL	√

Calculation of Seismic Loads Acting On Building		
Total Dynamic (Free) Mass of Building	0.00 t	√
	Live load factor = 0.3000	
Building Natural Vibration Period	Tr = 0.08 $\leq$ Ta = 0.10 $\leq$ Tb = 0.30 [s] - (UY)	√
Spectrum Factor	S(T) = 2.20	√
Calculated building mode count	Calculated building mode count is adequate	√
	78 dynamic modes are calculated	

Shearwall Summary Report		
Shearwall Analysis Results	Mmax : 12.93 [tfm] - (P001)	√
	Tmax : 4.29 [tfm] - (P001)	
	Vmax : 13.03 [tf] - (P001)	
	Nmax : -36.84 [tf] - (P001)	
Shearwall Design Bending Moments	Design bending moments has been used	√
Shearwall Reinforcement Bars Calculation	All shearwalls conform to required reinforcement rules	√
	Nd : 0.00 [tf] - (P03)	
	Md2 : 0.00 [tfm]	
	Md3 : 0.07 [tfm]	
	As : 7.50 [cm²]	
Shearwall Shear Safety	Ve ≤ Vr condition is satisfied by all shearwalls	√
	Ve ≤ 0.22Achfcd condition is satisfied by all shearwalls	
TBDY 7.6.6.2 Strong Shearwall Control	TBDY 7.6.6.2 strong shearwall control has been provided for all shearwalls	√

Analysis Settings Report

Seismic Forces Calculation Method	
Apply static lateral story forces calculated using modal combination	
Modal combinaton of individual element results	Selected

Slab Diaphragms Modelling Method	
Use full (mathematical) rigid diaphragms	Selected
Concentrate diaphragm masses at center of rigid diaphragms	
Use rigid diaphragms for vertical loads	
Use semi rigid diaphragms (Analysis model includes concrete slabs)	
Consider seismic effect for slab design	
Consider in plane forces for slab design (ENV 1992-1-1 1992 Eurocode 2)	

TDY Options		
Seismic zone	0.40	Selected
Building importance coefficient (I)	1.00	Selected
Additional eccentricity ratio	0.05	Selected
Load bearing system behaviour coefficient X	4.00	Selected
Load bearing system behaviour coefficient Y	4.00	Selected
Ductility X	High	Selected
Ductility Y	High	Selected
Use cantilever and simple supported beams on joint shear safety control		
Apply TDY 2007 2.8.5 to foundations		
Apply ductile buliding articles (TDY 2007 2.5.2.3, 2.8.5 & 3.5.2) to rigid basement		

Wind Loading		
Generate wind loads for sheetings		Selected
Normal type building / 0.8 - 1.2 sin(a) - 0.4		Selected
Tower type building / 1.2 - 1.6 sin(a) - 0.4		
Ground elevation	0 [m]	Selected
Apply leteral wind loads to diaphragms		Selected

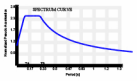

Foundation - Soil		
Soil unit weight	2.10 [tf/m³]	Selected
Coefficient of subgrade reaction	2500.00 [tf/m³]	Selected
Admissible ground stress	60.00 [tf/m²]	Selected
Soil class	S1	Selected
TA	0.100	
TB	0.300	
Increase admissible ground stress for earthquake quake loads		
Enlargement ratio		
Check ground safety of foundations according to average stress		
Use EQ loads in foundation ground safety check		Selected
Do negative ground stress check for foundations		
Check ground safety of raft foundations according to average stress		
Use seismic loads in flat plate foundation ground safety check		Selected
Do negative ground stress check for raft foundations		
Include foundations in upper structure		Selected

Raft foundation - upper structure interaction		
Direct connection		Selected
Enlarge connection area		
Ratio x h		
Thickness multiplier for shell elements under columns & shearwalls	1.00	Selected

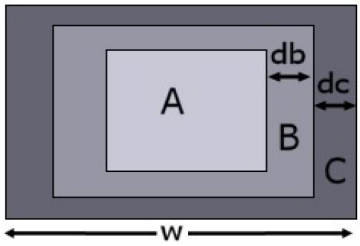

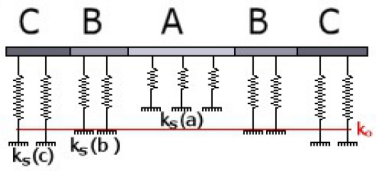

Use pseudo coupled winkler springs for raft foundation		
Zone B length ratio (db/w)		
Zone B factor ks(b)/ks(a)		
Zone C length ratio (dc/w)		
Zone C factor ks(c)/ks(a)		

Load - Safety		
Dead load factor	1.40	Selected
Live load factor	1.60	Selected
Wall unit weight for Ak calculations (t / m3)	1.30	Selected
Use same Ak as upper story on bottom story		Selected
Allowable reinforcement tolerance	0.00 %	Selected
Allowable section tolerance	0.00 %	Selected
Apply moment redistribution		
Apply TS498 live load reduction		
Residental, commercial or office buildings		
Light industrial buildings, workshops and warehouses		
Soft story determination criterion		
Stiffness irregularity factor nki > 2 (TDY2007)		Selected
Stiffness irregularity factor nki > 1.5 (ISMEP2008)		

Steel Design Options		
Design code		
AISC 360-16 (ASD)		
AISC 360-16 (LRFD)		
ÇYTHYEDY (GKT)		Selected
ÇYTHYEDY (YDKT)		
Bolt group analysis method		
Elastic		Selected
Instantaneous center of rotation		
Weld analysis method		
Elastic		Selected
Instantaneous center of rotation		
Reduce HSS design wall thickness		Selected

Strengthening Options		
Building information level		
Limited		Selected
Comprehensive		
Analysis extent		
Full analysis of existing & strengthened structure		Selected
Performance analysis of current structure only		
Use beam table sections		Selected
Use crossties for Vr calculation		Selected
Override beam reinforcement percentages		
Top percentage		
Bottom percentage		
Override column reinforcement percentages		
Column percentage		
Override shearwall reinforcement percentages		
Shearwall percentage		
Reinforcement realization ratios		
Beams (long./trans.)	1.000 / 1.000	Selected
Columns (long./trans.)	1.000 / 1.000	Selected
Shearwalls (long./trans.)	1.000 / 1.000	Selected

Other Analysis Settings	
Check project consistency before report generation	Selected
Naming	
B101	Selected
B1001	
Analysis steps	
Slab analysis & concrete design	Selected
Foundation analysis & concrete design	Selected

PURLIN INTRODUCTORY INFORMATION

h *: Height*

b *: Width*

t_w *: Web thickness*

t_f *: Flange thickness*

A *: Cross-sectional area*

I_y , I_z *: Moment of inertia for major and minor axis*

$W_{el.y}$, $W_{el.z}$ *: Elastic moment of resistance for major and minor axis*

$W_{pl.y}$, $W_{pl.z}$ *: Plastic moment of resistance for major and minor axis*

i_y , i_z *: Radius of gyration*

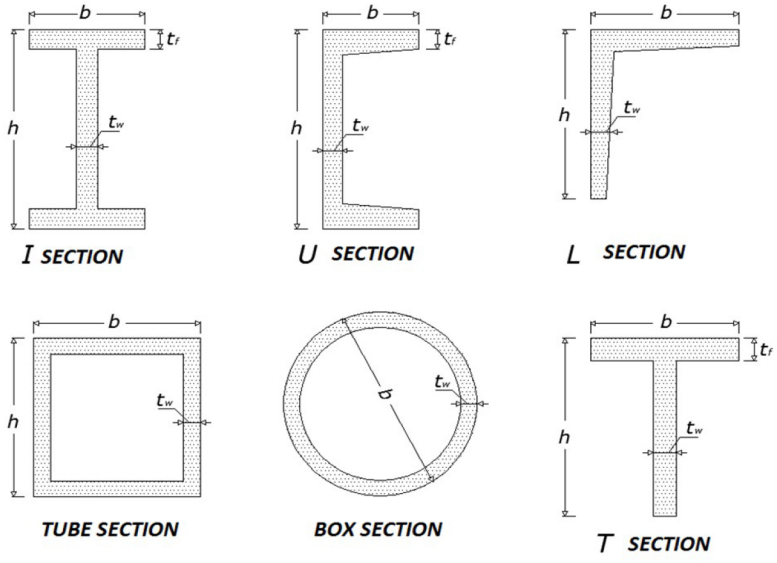

General Design Criteria	
Design Code Used For Steel Elements	ÇYTHYEDY (GKT)
Seismic Design Code	TBDY 2018
Used Analysis Method	Static Linear Analysis
Ductility	High Ductility
Safety Factor (Ω)	1.67

Materials Used On Purlin Elements						
Steel Grade	Yield Strength Fy [tf/m²]	Ultimate Strength Fu [tf/m²]	Modulus of Elasticity E [tf/m²]	Shear Modulus G [tf/m²]	Unit Weight [t/m³]	Coeff. of Thermal Exp. α
MAT1	16315.5	0	7.2	2.8	0.003	2.3E-6

Purlin Sections	Dimensions				Area	Strong Axis				Weak Axis			
Section	h [cm]	b [cm]	tw [cm]	tf [cm]	A [cm²]	Iy [cm4]	Wel.y [cm³]	Wpl.y [cm³]	iy [cm]	Iz [cm4]	Wel.z [cm³]	Wpl.z [cm³]	iz [cm]
PRF1	5	26			11.9	0	59.8	184.9	7.39	46.0	16.1	273.6	2.08

PURLIN LOADS

G : *Purlin system impact dead load*

Q : *Purlin system impact live load*

W : *Purlin system impact wind load*

P : *Purlin point load*

q : *Purlin uniform load*

Load Type(*) : *The load where come from above the purlins*

Load value : Numerical value of *point or uniform load*

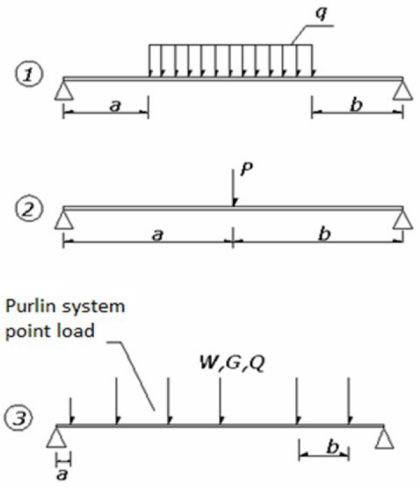

LOADS ACTING ON SHEETINGS

Sheeting	Unit Weight [tf/m²]	Snow Load [tf/m²]	Live load [tf/m²]	User Defined Wind Loads +X [tf/m²]	-X [tf/m²]	+Y [tf/m²]	-Y [tf/m²]
ZEMİN KAT							
	0.030	0.07	0	0.046	0.46	0.046	0.046

Purlin	Load Type	*	Load	a [cm]	b [cm]
PE002(x4)	Own load	1	0.116 tf/m	0	0
	Sheeting Own Load	1	0.006 tf/m	0	0
PE002(x16)	Own load	1	0.116 tf/m	0	0
	Sheeting Own Load	1	0.008 tf/m	0	0

Purlin	Load Type	*	Load	a [cm]	b [cm]
PE002(x2)	Own load	1	0.116 tf/m	0	0
	Sheeting Own Load	1	0.010 tf/m	0	0

PURLIN COMBINED FORCES DESIGN CHECK

P_u : *The available axial compressive strength*

P_n/Ω : *The allowable compressive strength*

M_u : *The available flexural strength*

M_n/Ω : *The allowable flexural strength*

λ : *Slenderness ratio*

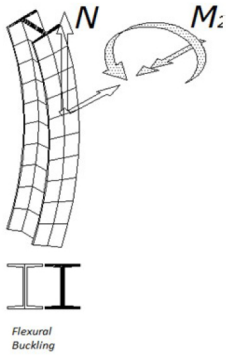

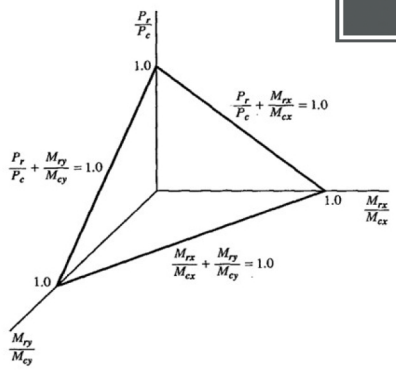

Purlin	Design Point [m]	Axial Pu [tf]	Axial Pn/Ω [tf]	Major Axis Bending Mu [tfm]	Major Axis Bending Mn/Ω [tfm]	Minor Axis Bending Mu [tfm]	Minor Axis Bending Mn/Ω [tfm]	Check Interaction Equation	Check Ratio <1
PE002_1 (PRF1)	4.18	0	0	0.01	0	0	0.03	(C5.1.1-2)	0.13106
G+0.75Q+0.75S+0.75WY(-)									√
PE002_2 (PRF1)	4.18	0	0	0.01	0	0	0.03	(C5.1.1-2)	0.13106
G+0.75Q+0.75S+0.75WY(-)									√
PE002_3 (PRF1)	4.18	0	0	0.02	0	0	0.03	(C5.1.1-2)	0.22905
G+0.75Q+0.75S+0.75WY(-)									√
PE002_4 (PRF1)	4.18	0	0	0.02	0	0	0.03	(C5.1.1-2)	0.15800
G+0.75Q+0.75S+0.75WY(-)									√
PE002_5 (PRF1)	4.18	0	0	0.02	0	0	0.03	(C5.1.1-2)	0.158037
G+0.75Q+0.75S+0.75WY(-)									√
PE002_6 (PRF1)	4.18	0	0	0.02	0	0	0.03	(C5.1.1-2)	0.158034
G+0.75Q+0.75S+0.75WY(-)									√
PE002_7 (PRF1)	4.18	0	0	0.02	0	0	0.03	(C5.1.1-2)	0.158033
G+0.75Q+0.75S+0.75WY(-)									√
PE002_8 (PRF1)	4.18	0	0	0.02	0	0	0.03	(C5.1.1-2)	0.158031
G+0.75Q+0.75S+0.75WY(-)									√
PE002_9 (PRF1)	4.18	0	0	0.02	0	0	0.03	(C5.1.1-2)	0.158030
G+0.75Q+0.75S+0.75WY(-)									√
PE002_10 (PRF1)	4.18	0	0	0.02	0	0	0.03	(C5.1.1-2)	0.158030
G+0.75Q+0.75S+0.75WY(-)									√
PE002_11 (PRF1)	4.18	0	0	0.02	0	0	0.03	(C5.1.1-2)	0.158030
G+0.75Q+0.75S+0.75WY(-)									√
PE002_12 (PRF1)	4.18	0	0	0.02	0	0	0.03	(C5.1.1-2)	0.158030
G+0.75Q+0.75S+0.75WY(-)									√
PE002_13 (PRF1)	4.18	0	0	0.02	0	0	0.03	(C5.1.1-2)	0.158030
G+0.75Q+0.75S+0.75WY(-)									√
PE002_14 (PRF1)	4.18	0	0	0.02	0	0	0.03	(C5.1.1-2)	0.158030
G+0.75Q+0.75S+0.75WY(-)									
PE002_15 (PRF1)	4.18	0	0	0.02	0	0	0.03	(C5.1.1-2)	0.15801
G+0.75Q+0.75S+0.75WY(-)									√
PE002_16 (PRF1)	4.18	0	0	0.02	0	0	0.03	(C5.1.1-2)	0.158033
G+0.75Q+0.75S+0.75WY(-)									√
PE002_17 (PRF1)	4.18	0	0	0.02	0	0	0.03	(C5.1.1-2)	0.158534
G+0.75Q+0.75S+0.75WY(-)									√
PE002_18 (PRF1)	4.18	0	0	0.02	0	0	0.03	(C5.1.1-2)	0.158737
G+0.75Q+0.75S+0.75WY(-)									√
PE002_19 (PRF1)	4.18	0	0	0.02	0	0	0.03	(C5.1.1-2)	0.158640
G+0.75Q+0.75S+0.75WY(-)									√
PE002_20 (PRF1)	4.18	0	0	0.02	0	0	0.03	(C5.1.1-2)	0.429895
G+0.75Q+0.75S+0.75WY(-)									√
PE002_21 (PRF1)	4.18	0	0	0.01	0	0	0.03	(C5.1.1-2)	0.531026
G+0.75Q+0.75S+0.75WY(-)									√
PE002_22 (PRF1)	4.18	0	0	0.01	0	0	0.03	(C5.1.1-2)	0.531026
G+0.75Q+0.75S+0.75WY(-)									√

PURLIN SHEAR CHECK

Ω *: Safety factor for shear*

V_n *: The nominal shear strength*

V_n /Ω *: The allowable shear strength*

V_u *: The available shear strength*

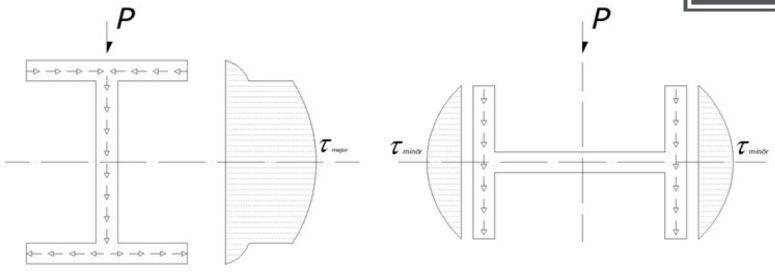

Purlin	Axis	Combination	Vu [tf]	Vn/Ω [tf]	Vu/(Vn/Ω)	Vu/(Vn/Ω) <1
PE002_1	Major Axis	G+0.75Q+0.75S+0.75WY(-)	0.02	0	0.1882	√
PRF1	Minor Axis	G+0.75Q+0.75S+0.75WY(-)	0	4.08	0.000	√
PE002_2	Major Axis	G+0.75Q+0.75S+0.75WY(-)	0.02	0	0.1882	√
PRF1	Minor Axis	G+0.75Q+0.75S+0.75WY(-)	0	4.08	0.000	√
PE002_3	Major Axis	G+0.75Q+0.75S+0.75WY(-)	0.02	0	0.1882	√
PRF1	Minor Axis	G+0.75Q+0.75S+0.75WY(-)	0	4.08	0.000	√
PE002_4	Major Axis	G+0.75Q+0.75S+0.75WY(-)	0.02	0	0.1882	√
PRF1	Minor Axis	G+0.75Q+0.75S+0.75WY(-)	0	4.08	0.000	√
PE002_5	Major Axis	G+0.75Q+0.75S+0.75WY(-)	0.02	0	0.1882	√
PRF1	Minor Axis	G+0.75Q+0.75S+0.75WY(-)	0	4.08	0.000	√
PE002_6	Major Axis	G+0.75Q+0.75S+0.75WY(-)	0.02	0	0.1882	√
PRF1	Minor Axis	G+0.75Q+0.75S+0.75WY(-)	0	4.08	0.000	√
PE002_7	Major Axis	G+0.75Q+0.75S+0.75WY(-)	0.02	0	0.1882	√
X PRF1	Minor Axis	G+0.75Q+0.75S+0.75WY(-)	0	4.08	0.000	√
PE002_8	Major Axis	G+0.75Q+0.75S+0.75WY(-)	0.02	0	0.1882	√
PRF1	Minor Axis	G+0.75Q+0.75S+0.75WY(-)	0	4.08	0.000	√
PE002_9	Major Axis	G+0.75Q+0.75S+0.75WY(-)	0.02	0	0.1882	√
PRF1	Minor Axis	G+0.75Q+0.75S+0.75WY(-)	0	4.08	0.000	√
PE002_10	Major Axis	G+0.75Q+0.75S+0.75WY(-)	0.02	0	0.1882	√
PRF1	Minor Axis	G+0.75Q+0.75S+0.75WY(-)	0	4.08	0.000	√
PE002_11	Major Axis	G+0.75Q+0.75S+0.75WY(-)	0.02	0	0.1882	√
PRF1	Minor Axis	G+0.75Q+0.75S+0.75WY(-)	0	4.08	0.000	√
PE002_12	Major Axis	G+0.75Q+0.75S+0.75WY(-)	0.02	0	0.1882	√
PRF1	Minor Axis	G+0.75Q+0.75S+0.75WY(-)	0	4.08	0.000	√
PE002_13	Major Axis	G+0.75Q+0.75S+0.75WY(-)	0.02	0	0.1882	√
PRF1	Minor Axis	G+0.75Q+0.75S+0.75WY(-)	0	4.08	0.000	√
PE002_14	Major Axis	G+0.75Q+0.75S+0.75WY(-)	0.02	0	0.1882	√
PRF1	Minor Axis	G+0.75Q+0.75S+0.75WY(-)	0	4.08	0.000	√
PE002_15	Major Axis	G+0.75Q+0.75S+0.75WY(-)	0.02	0	0.1882	√
PRF1	Minor Axis	G+0.75Q+0.75S+0.75WY(-)	0	4.08	0.000	√
PE002_16	Major Axis	G+0.75Q+0.75S+0.75WY(-)	0.02	0	0.1882	√
PRF1	Minor Axis	G+0.75Q+0.75S+0.75WY(-)	0	4.08	0.000	√
PE002_17	Major Axis	G+0.75Q+0.75S+0.75WY(-)	0.02	0	0.1882	√
PRF1	Minor Axis	G+0.75Q+0.75S+0.75WY(-)	0	4.08	0.000	√
PE002_18	Major Axis	G+0.75Q+0.75S+0.75WY(-)	0.02	0	0.1882	√
PRF1	Minor Axis	G+0.75Q+0.75S+0.75WY(-)	0	4.08	0.000	√
PE002_19	Major Axis	G+0.75Q+0.75S+0.75WY(-)	0.02	0	0.1882	√
PRF1	Minor Axis	G+0.75Q+0.75S+0.75WY(-)	0	4.08	0.000	√
PE002_20	Major Axis	G+0.75Q+0.75S+0.75WY(-)	0.02	0	0.1882	√
PRF1	Minor Axis	G+0.75Q+0.75S+0.75WY(-)	0	4.08	0.000	√
PE002_21	Major Axis	G+0.75Q+0.75S+0.75WY(-)	0.02	0	0.1882	√
PRF1	Minor Axis	G+0.75Q+0.75S+0.75WY(-)	0	4.08	0.000	√
PE002_22	Major Axis	G+0.75Q+0.75S+0.75WY(-)	0.02	0	0.1882	√
PRF1	Minor Axis	G+0.75Q+0.75S+0.75WY(-)	0	4.08	0.000	√

PURLIN DEFLECTION CHECK

$\delta_i < l/360$

δ_i : *Deflection*

ln : *The span length from support to support*

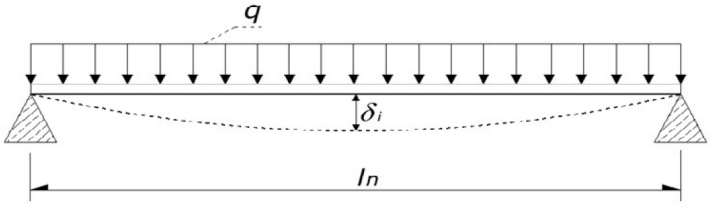

Purlin	Com.	ln [m]	δi [mm]	Check δi<limit	Purlin	Com.	ln [m]	δi [mm]	Check δi<limit
PE002_1 (PRF1)	G+Q	4	11	11>12.0 (l/350) √	PE002_2 (PRF1)	G+Q	4	11	11>12.0 (l/350) √
PE002_3 (PRF1)	G+Q	4	11	11>12.0 (l/350) √	PE002_4 (PRF1)	G+Q	4	11	11>12.0 (l/350) √
PE002_5 (PRF1)	G+Q	4	11	11>12.0 (l/350) √	PE002_6 (PRF1)	G+Q	4	11	11>12.0 (l/350) √
PE002_7 (PRF1)	G+Q	4	11	11>12.0 (l/350) √	PE002_8 (PRF1)	G+Q	4	11	11>12.0 (l/350) √
PE002_9 (PRF1)	G+Q	4	11	11>12.0 (l/350) √	PE002_10 (PRF1)	G+Q	4	11	11>12.0 (l/350) √
PE002_11 (PRF1)	G+Q	4	11	11>12.0 (l/350) √	PE002_12 (PRF1)	G+Q	4	11	11>12.0 (l/350) √
PE002_13 (PRF1)	G+Q	4	11	11>12.0 (l/350) √	PE002_14 (PRF1)	G+Q	4	11	11>12.0 (l/350) √
PE002_15 (PRF1)	G+Q	4	11	11>12.0 (l/350) √	PE002_16 (PRF1)	G+Q	4	11	11>12.0 (l/350) √
PE002_17 (PRF1)	G+Q	4	11	11>12.0 (l/350) √	PE002_18 (PRF1)	G+Q	4	11	11>12.0 (l/350) √
PE002_19 (PRF1)	G+Q	4	11	11>12.0 (l/350) √	PE002_20 (PRF1)	G+Q	4	11	11>12.0 (l/350) √
PE002_21 (PRF1)	G+Q	4	11	11>12.0 (l/350) √	PE002_22 (PRF1)	G+Q	4	11	11>12.0 (l/350) √

BEAM INTRODUCTORY INFORMATION

h *: Height*

b *: Width*

t_w *: Web thickness*

t_f *: Flange thickness*

A *: Cross-sectional area*

I_y , I_z *: Moment of inertia for major and minor axis*

$W_{el.y}$, $W_{el.z}$ *: Elastic moment of resistance for major and minor axis*

$W_{pl.y}$, $W_{pl.z}$ *: Plastic moment of resistance for major and minor axis*

i_y , i_z *: Radius of gyration*

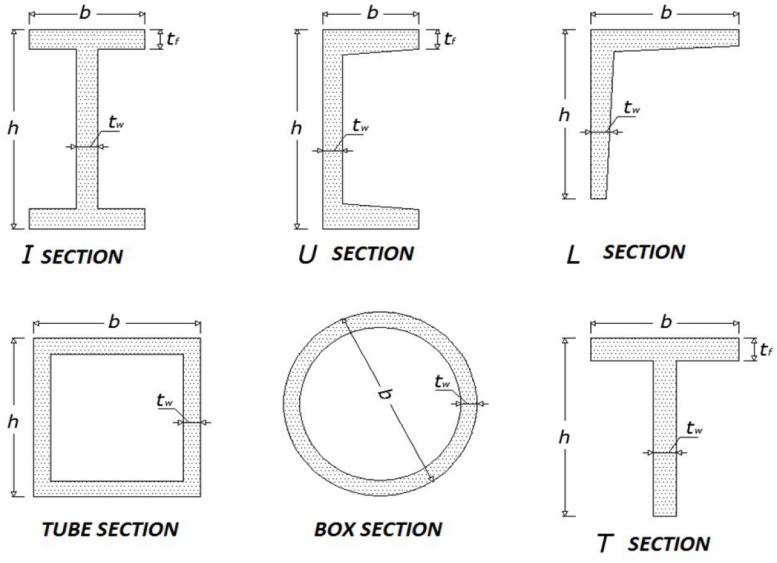

General Design Criteria	
Design Code Used For Steel Elements	ÇYTHYEDY (GKT)
Seismic Design Code	TBDY 2018
Used Analysis Method	Static Linear Analysis
Ductility	High Ductility
Safety Factor (Ω)	1.67

Materials Used On Beam Elements						
Steel Grade	Yield Strength Fy [tf/m²]	Ultimate Strength Fu [tf/m²]	Modulus of Elasticity E [tf/m²]	Shear Modulus G [tf/m²]	Unit Weight [t/m³]	Coeff. of Thermal Exp. α
MAT1	16315.5	0	7.2	2.8	0.003	2.3E-6

Beam Sections	Dimensions				Area	Strong Axis				Weak Axis			
Section	h [cm]	b [cm]	tw [cm]	tf [cm]	A [cm²]	Iy [cm4]	Wel.y [cm³]	Wpl.y [cm³]	iy [cm]	Iz [cm4]	Wel.z [cm³]	Wpl.z [cm³]	iz [cm]
PRF2	14	16			15.5	1531.7	178.9	66.7	3.46	427.7	32.8	57.8	8.56

105°

climate control

Bioclimatic İnstalation Detail

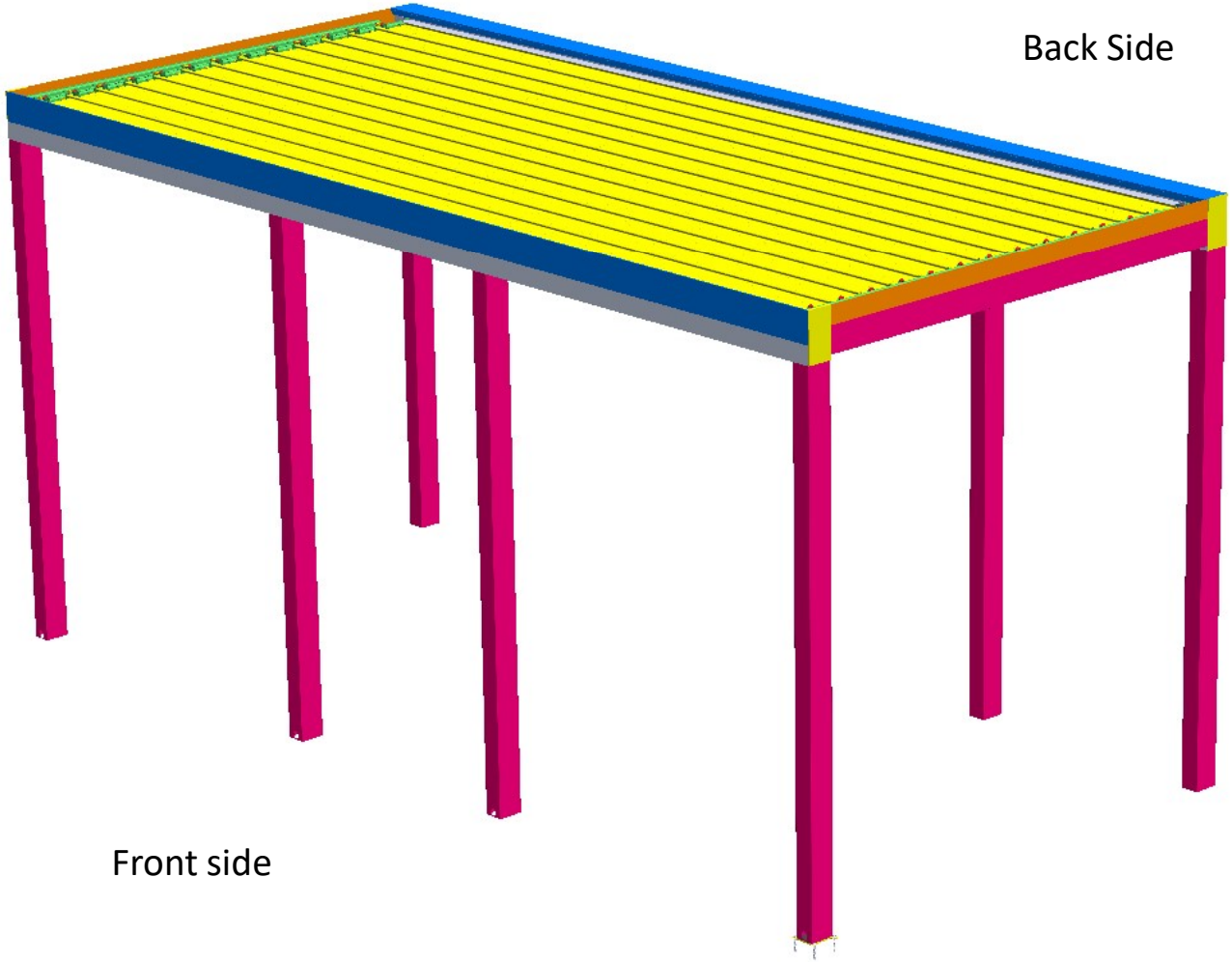

POST INSTALATION

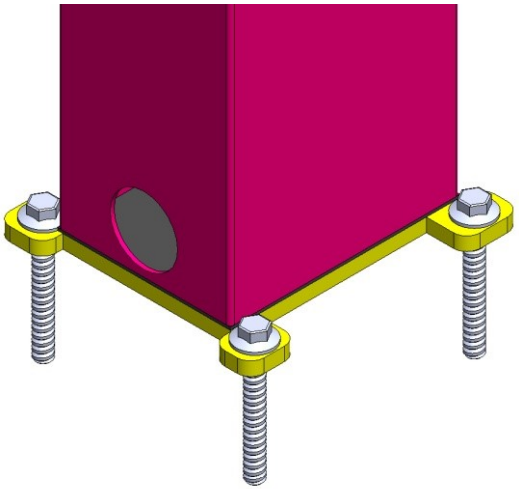

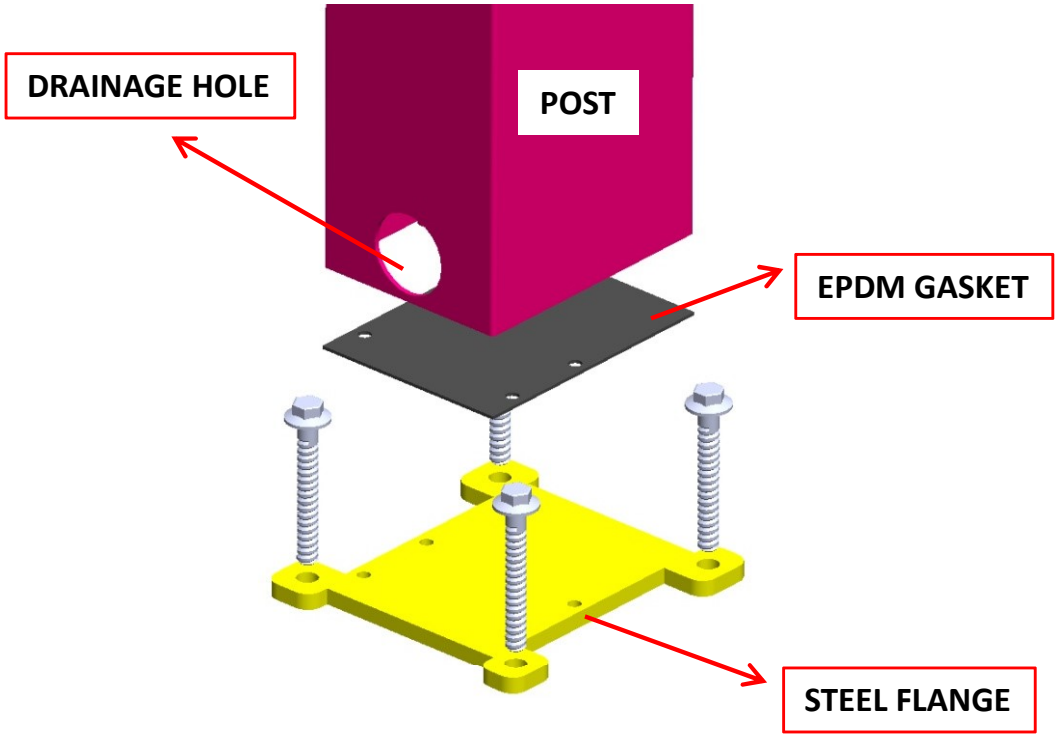

GUTTER AND RAIL INSTALATION

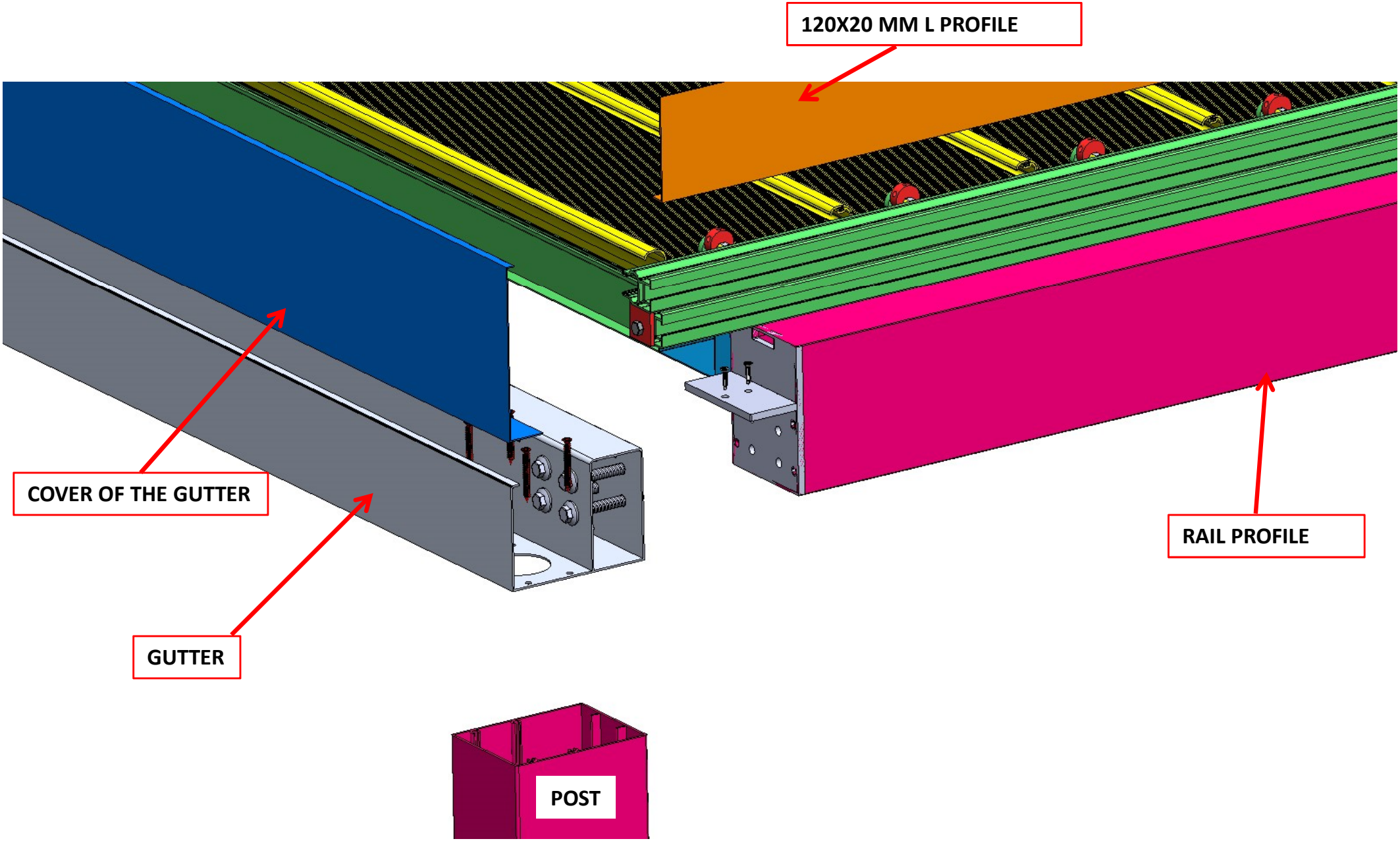

GUTTER AND RAIL INSTALATION

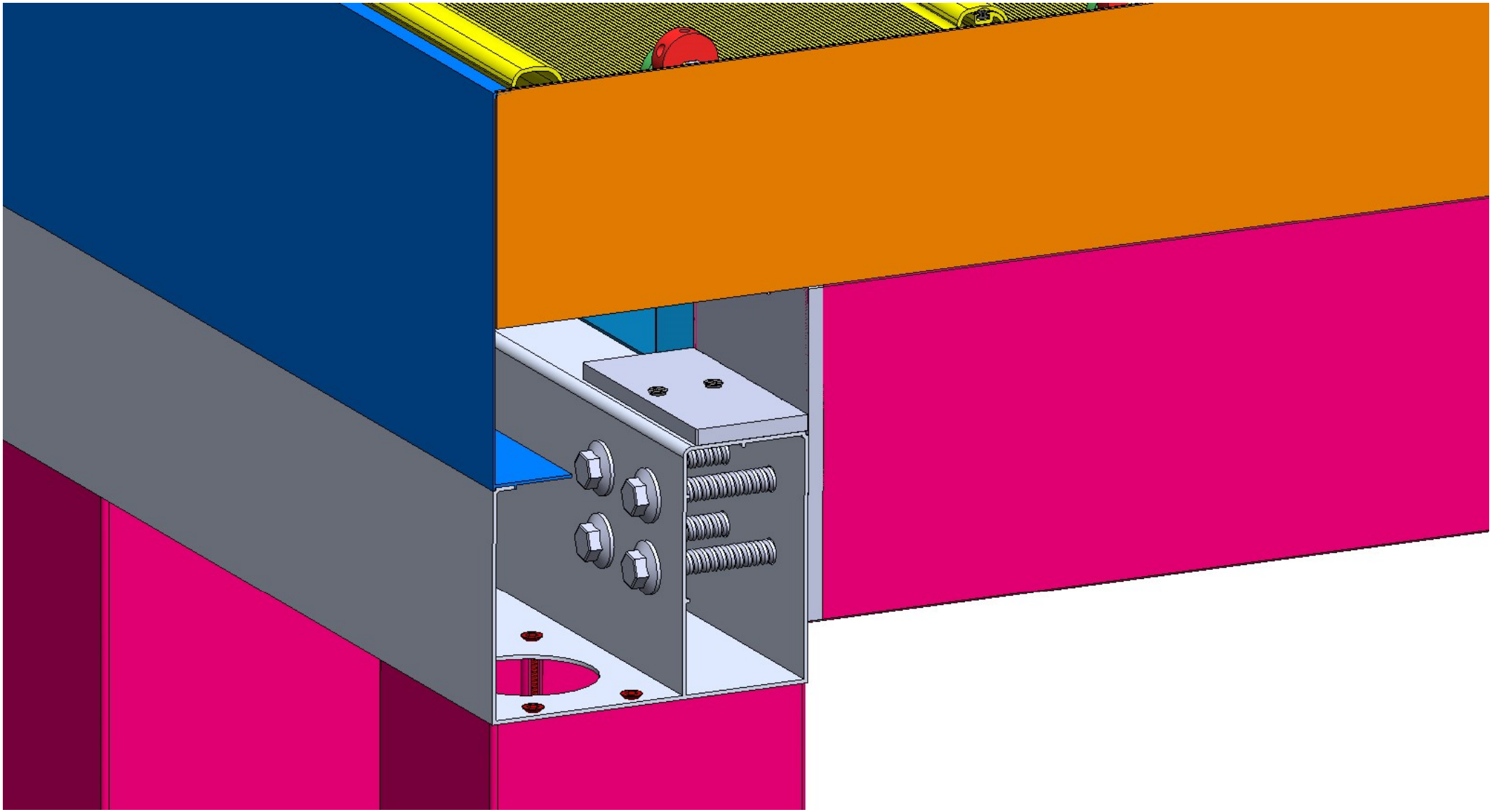

BACK GUTTER AND RAIL INSTALATION

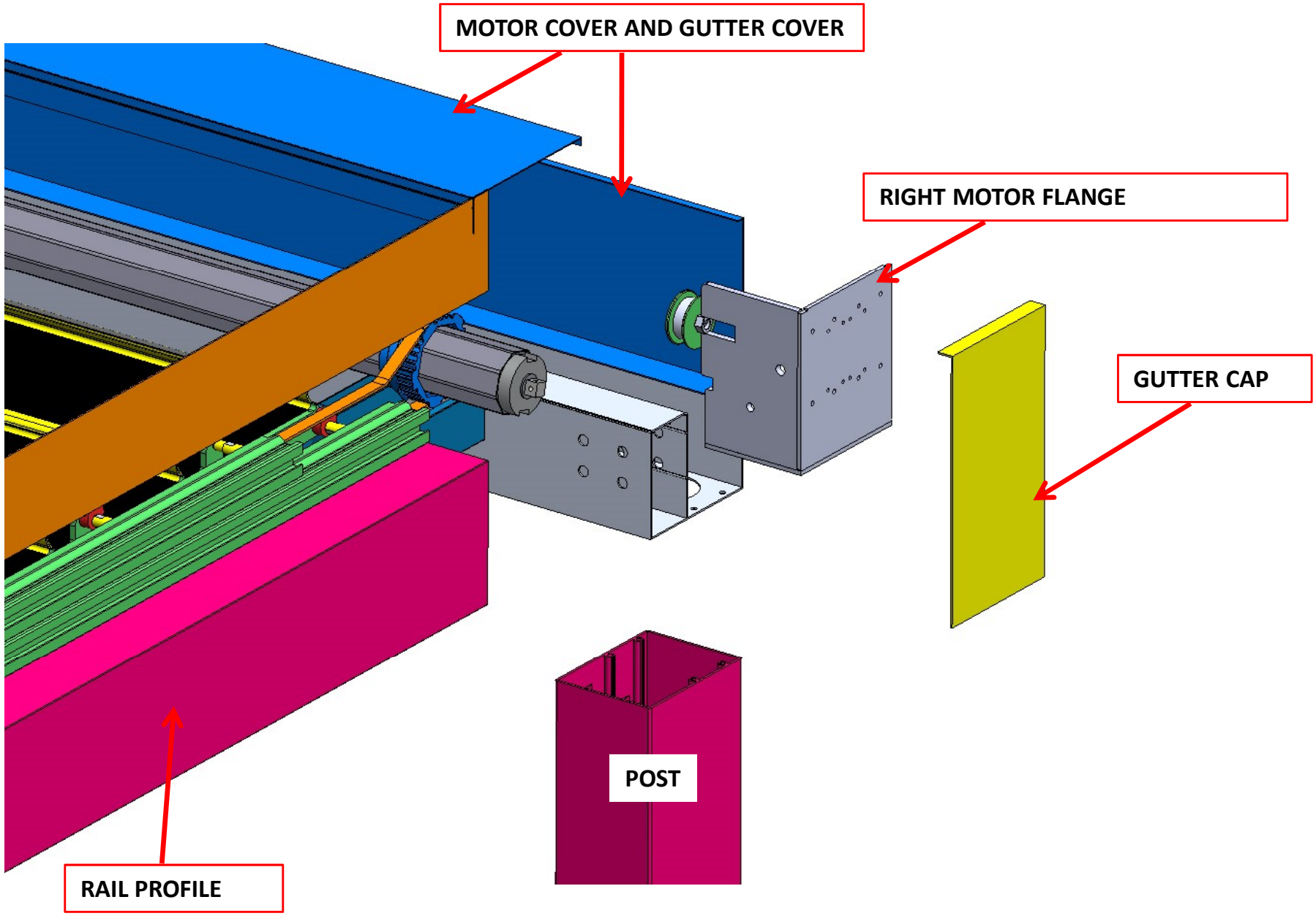

BACK AND SIDE SMALL GUTTER INSTALATION

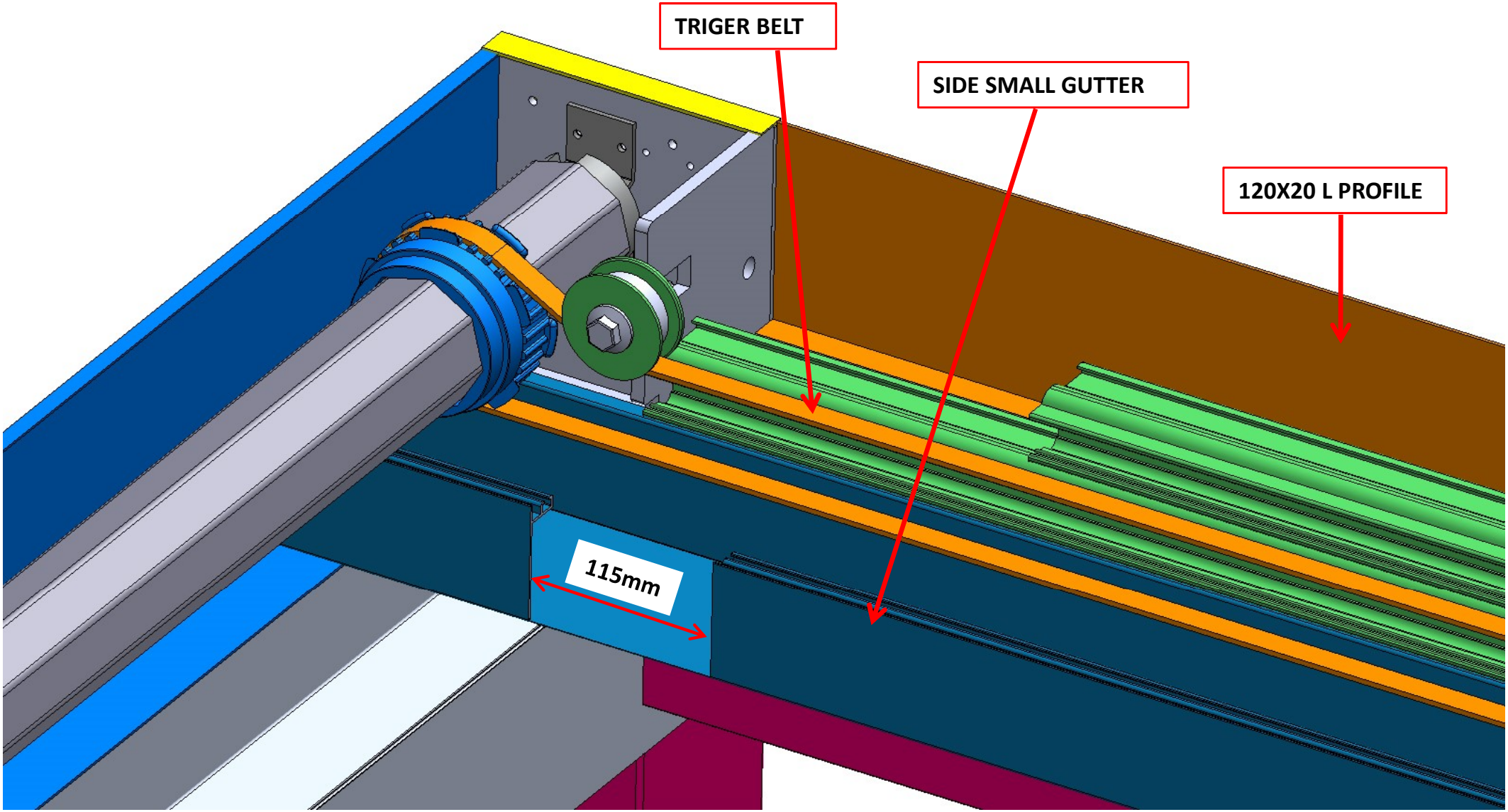

BACK AND SIDE SMALL GUTTER INSTALATION

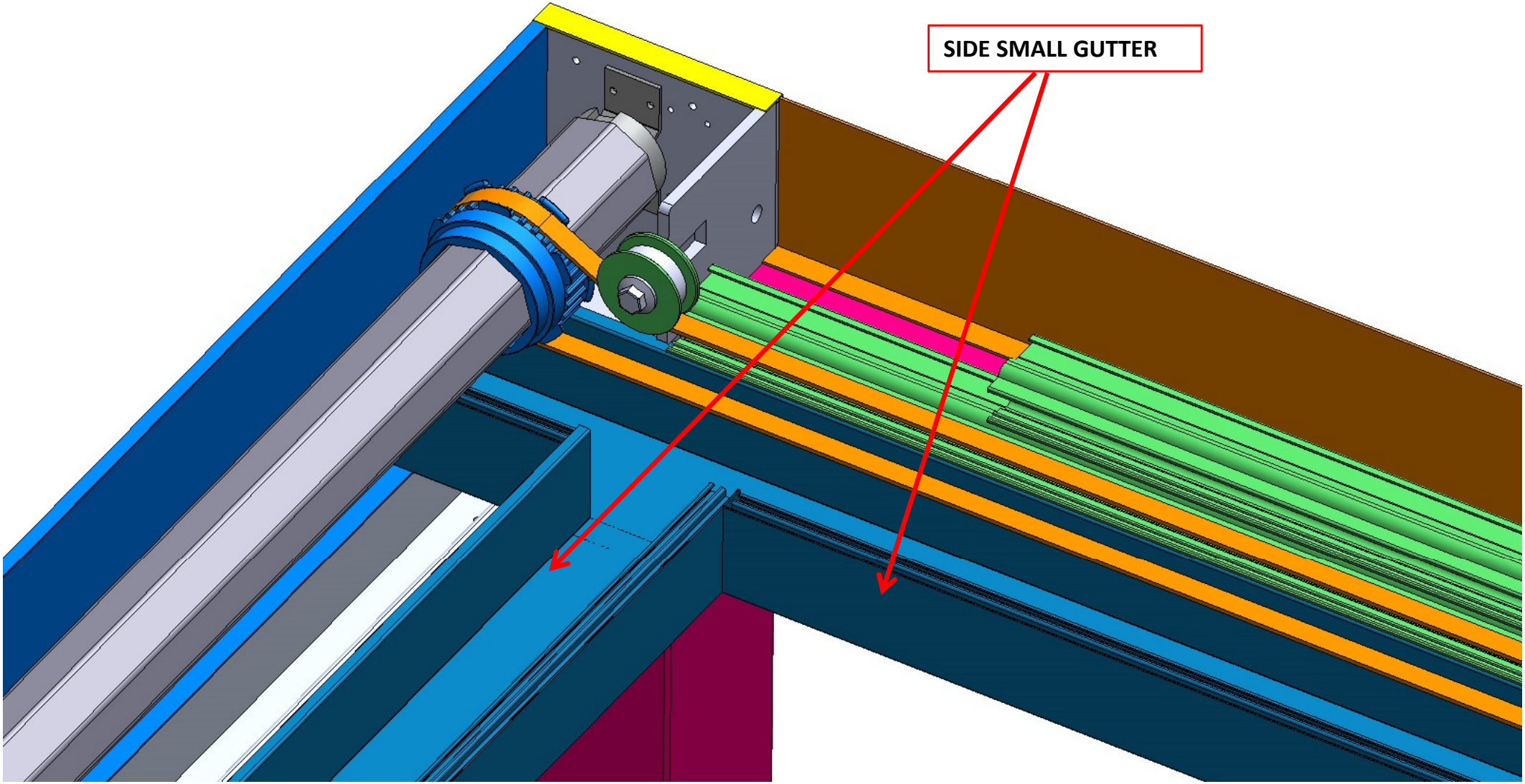

MIDDLE BEAM AND SMALL GUTTER

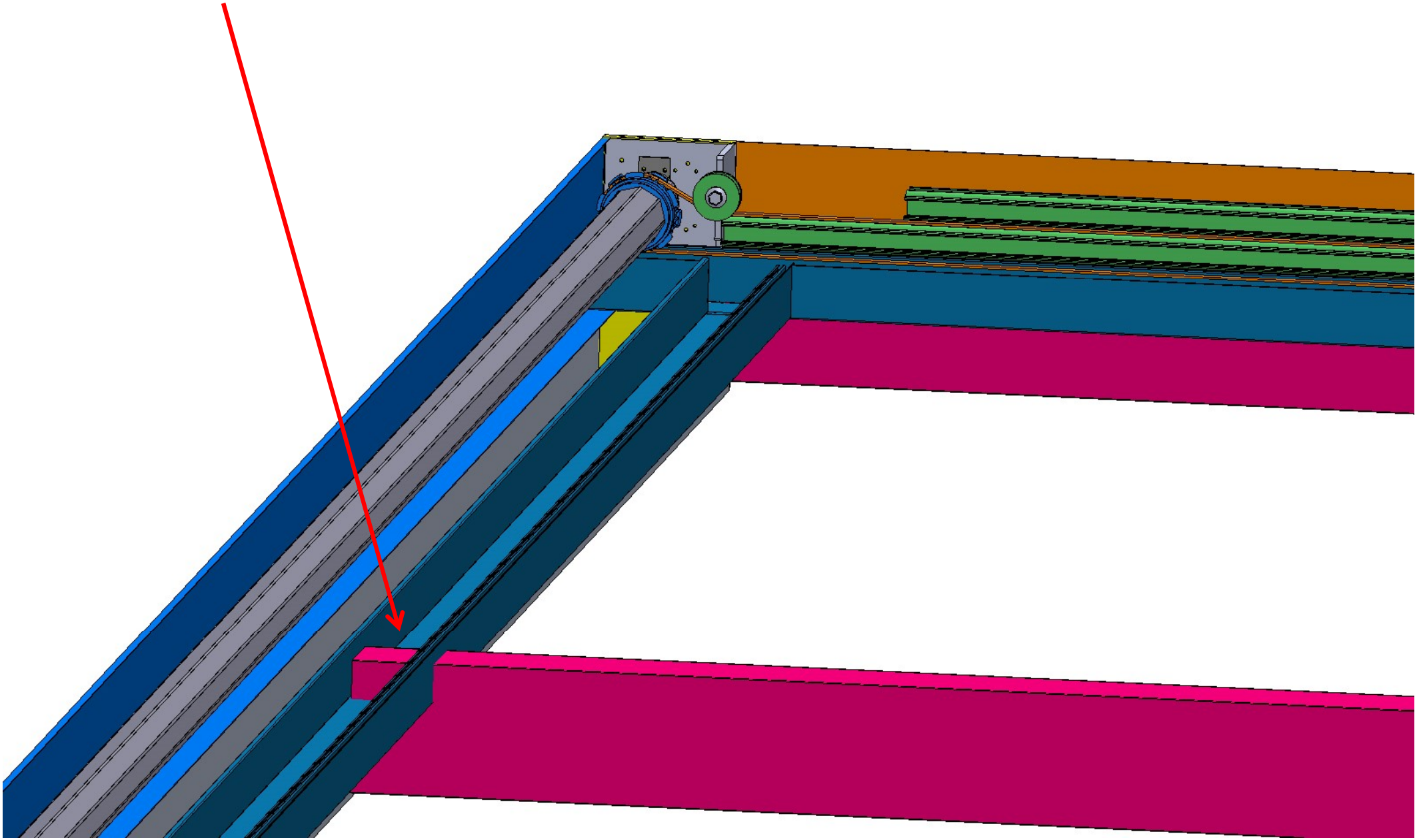

MIDDLE BEAM AND SMALL GUTTER

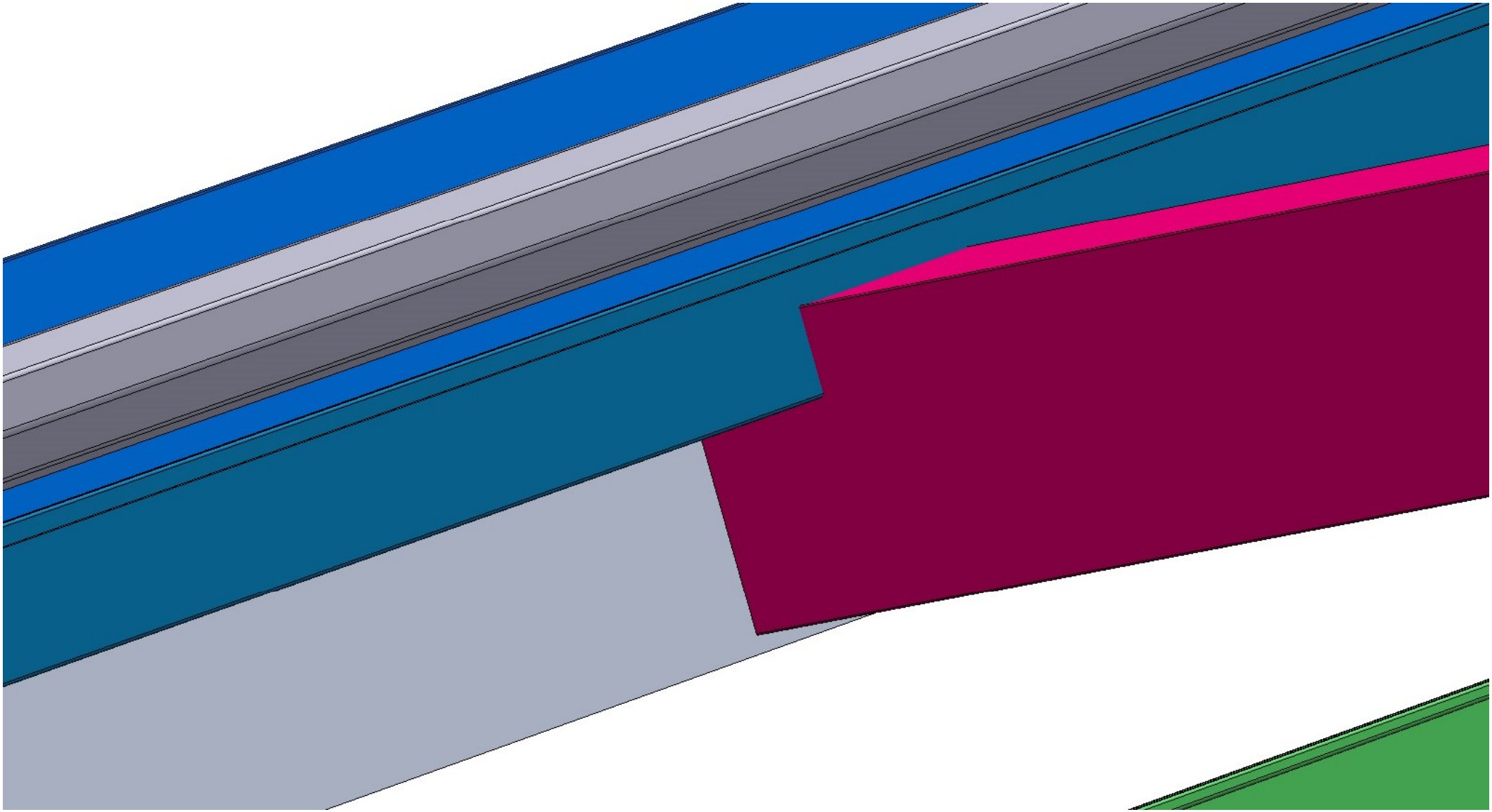

TENSION INSTALATION

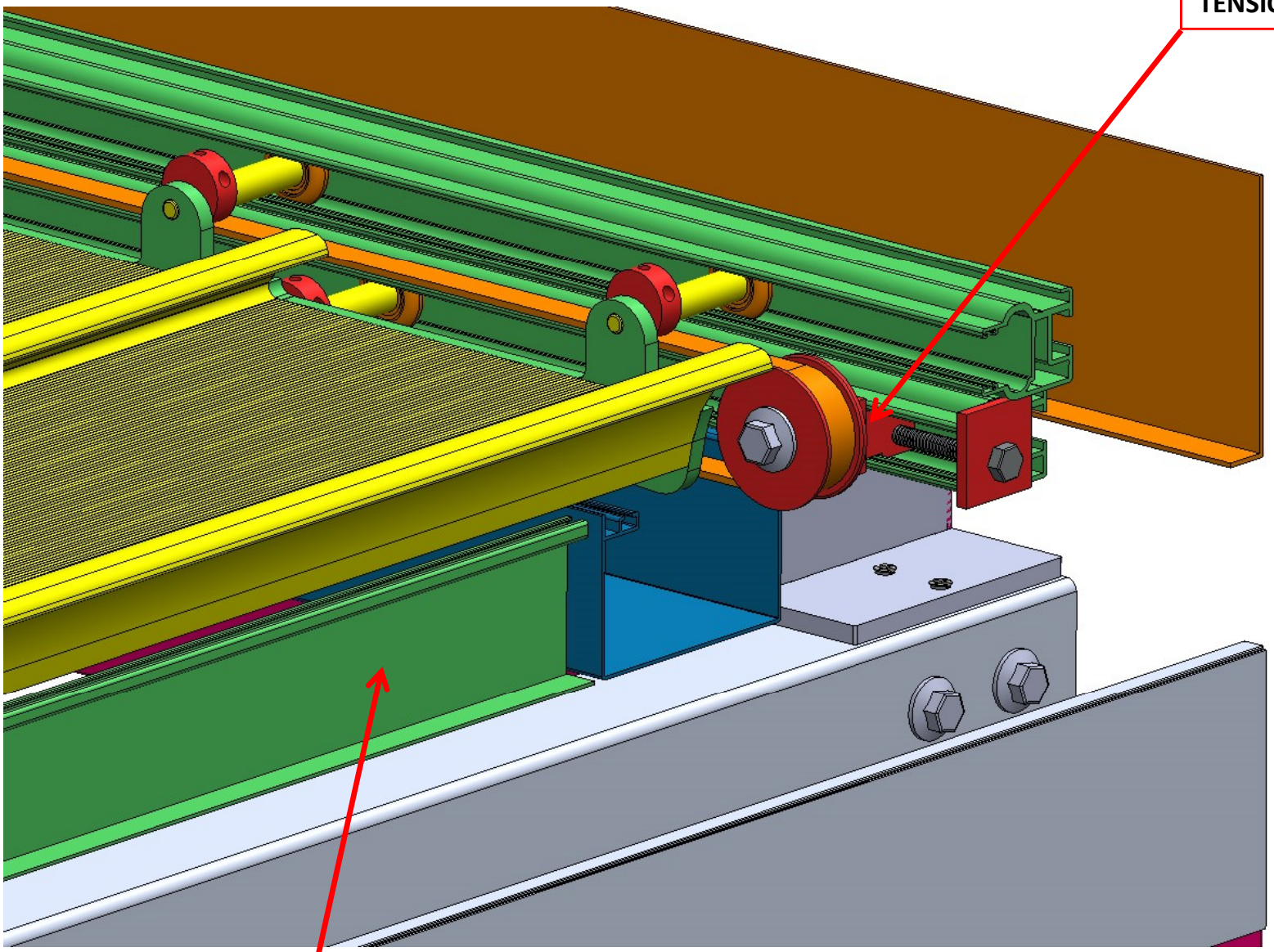

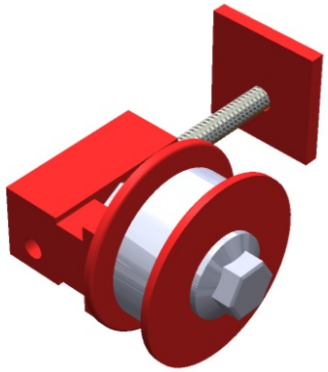

TRIGER LOCK

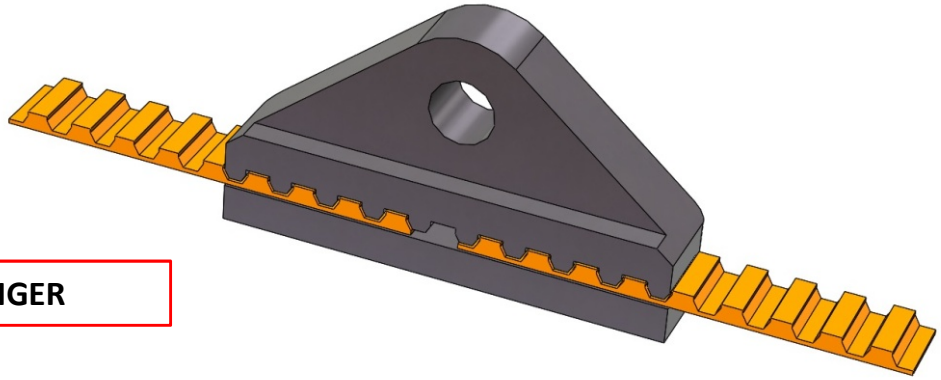

LOCK OF THE TRIGER

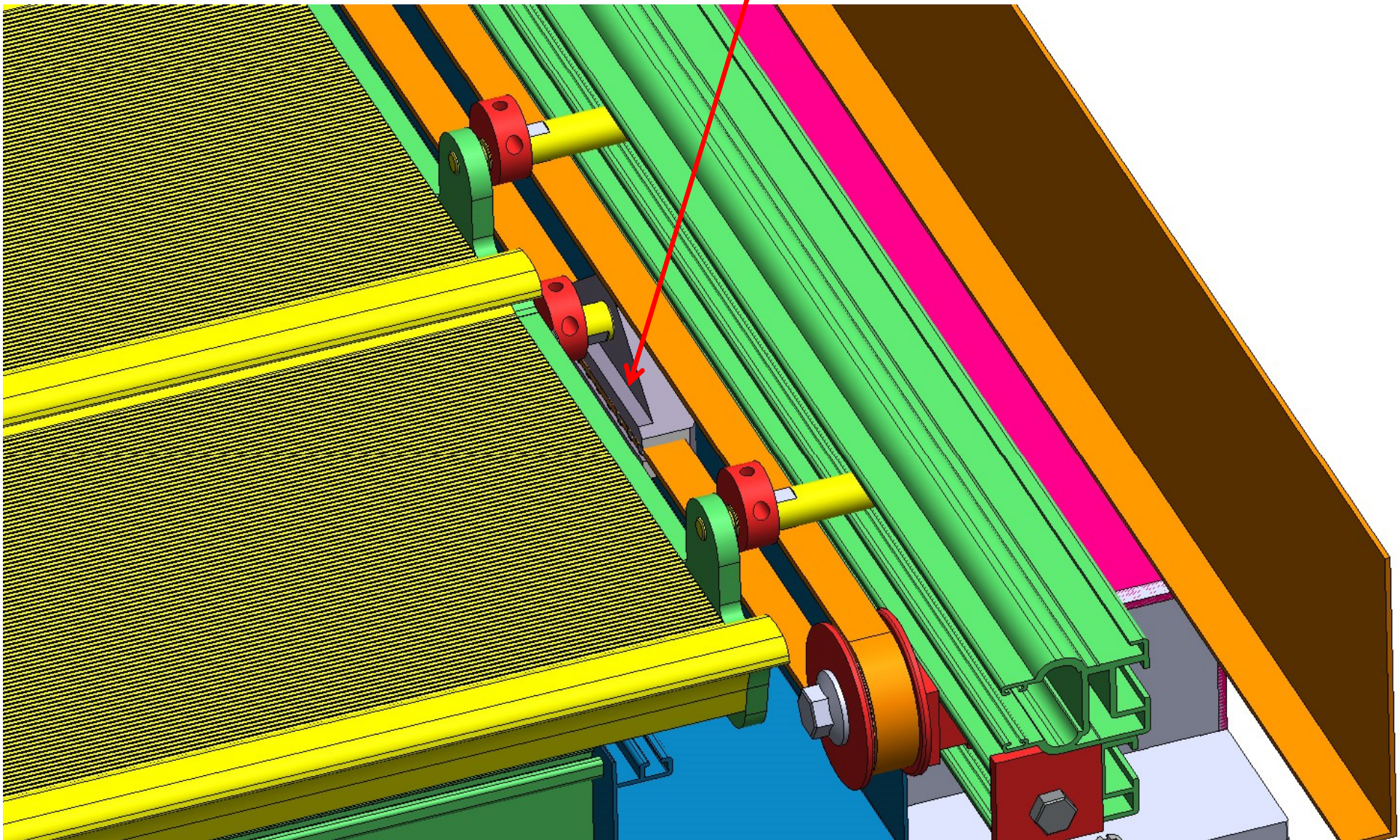

LOUVER WHEEL IN THE MIDDLE
NOT: THIS WHEEL IS USING FOR WIDER THAN 400CM LOUVER

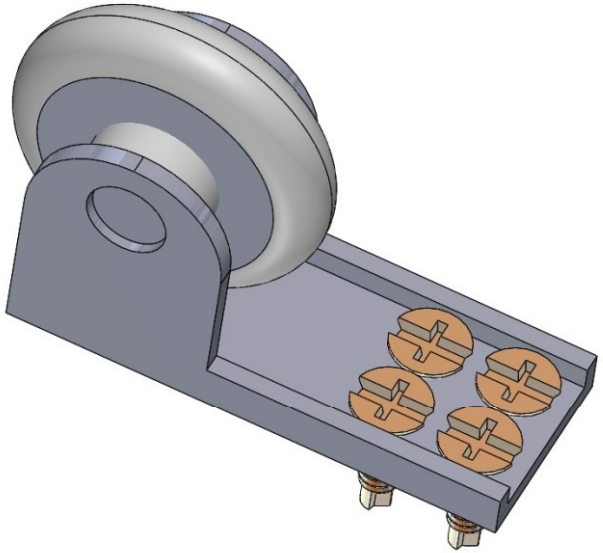

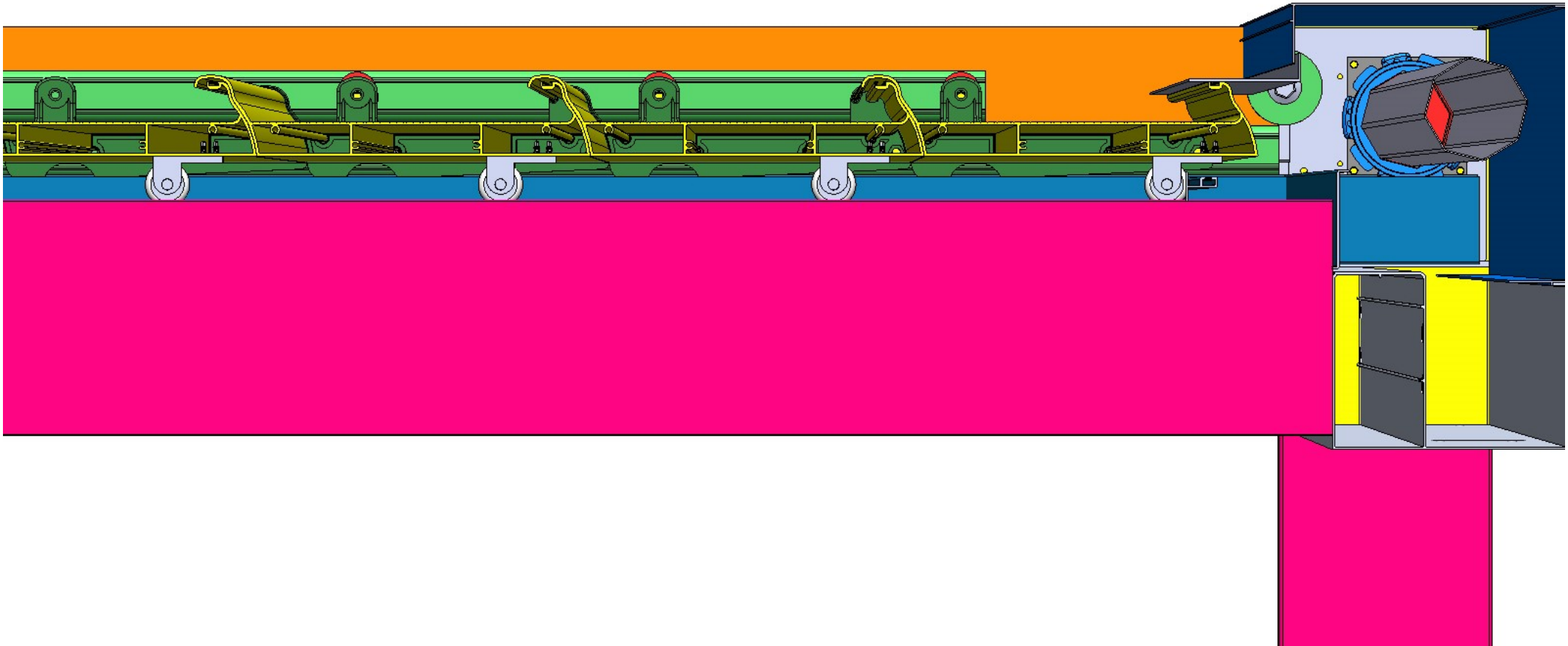

LOUVER WHEEL IN THE MIDDLE
NOT: THIS WHEEL IS USING FOR WIDER THAN 400CM LOUVER

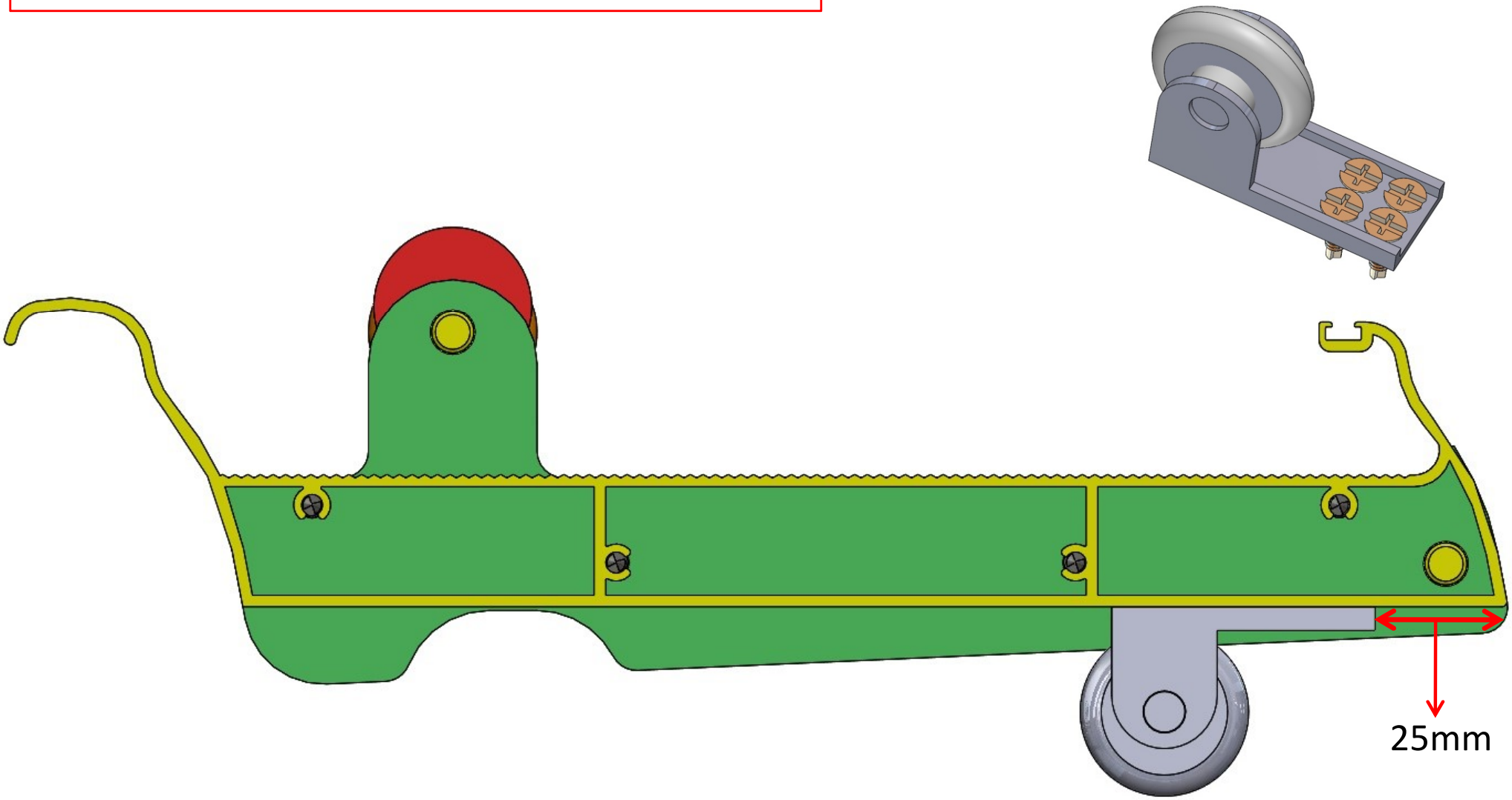

FIX LOUVER SPACE
NOT: IT HAS TO BE MINIUM 70mm MAXIMIUM 90mm BEETWEN MOTOR BOX AND LOUVER

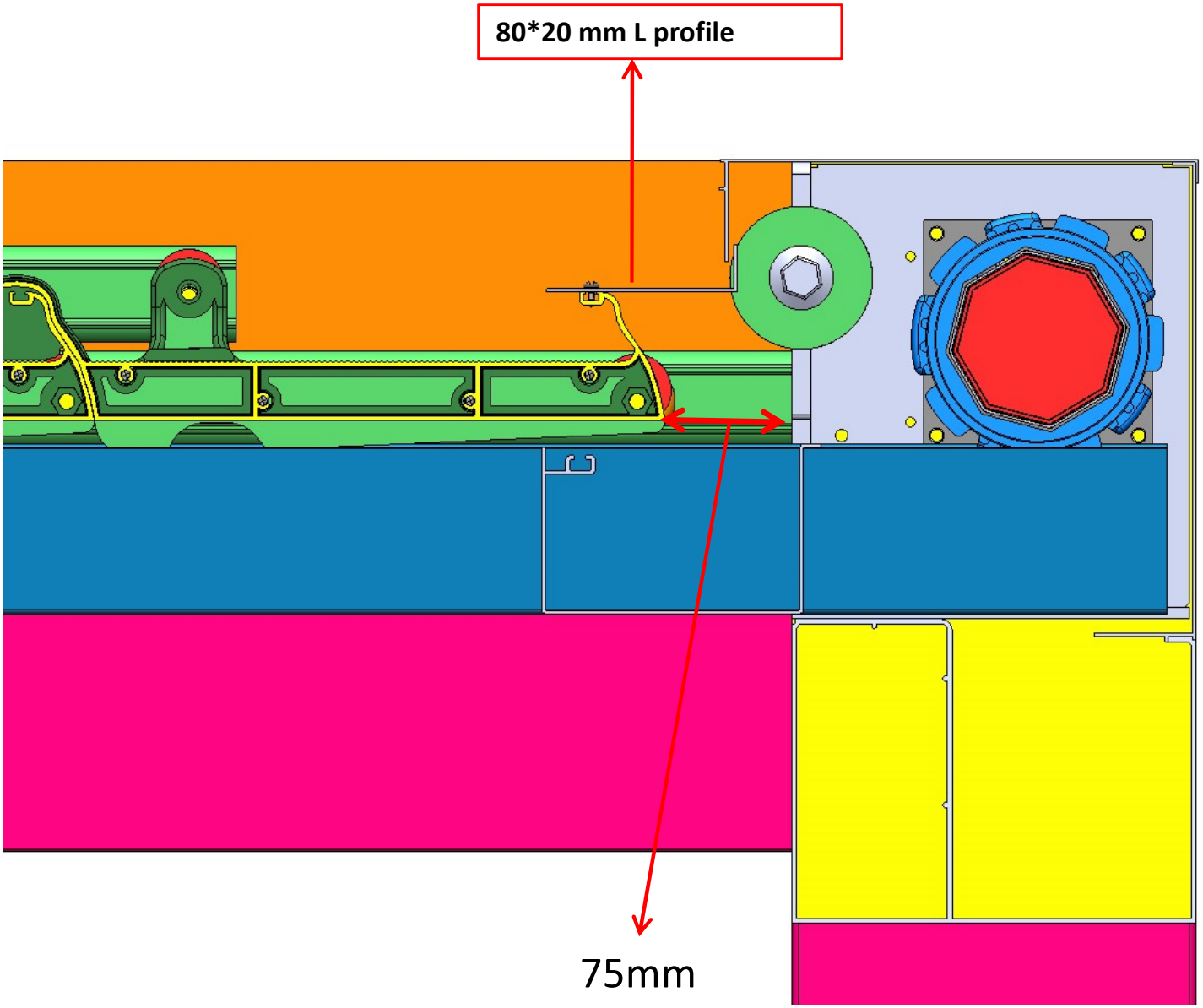

LOUVER LOCK

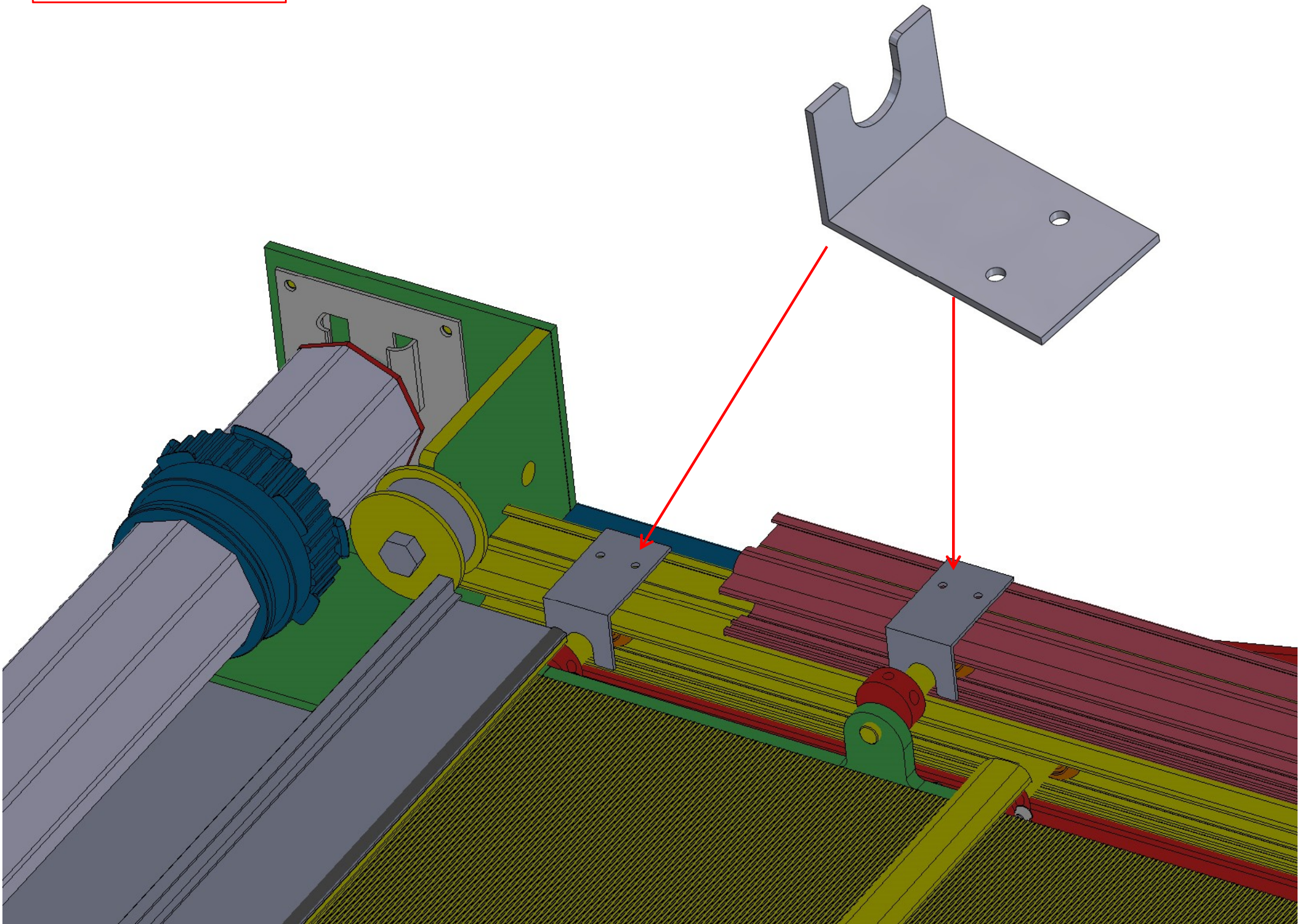

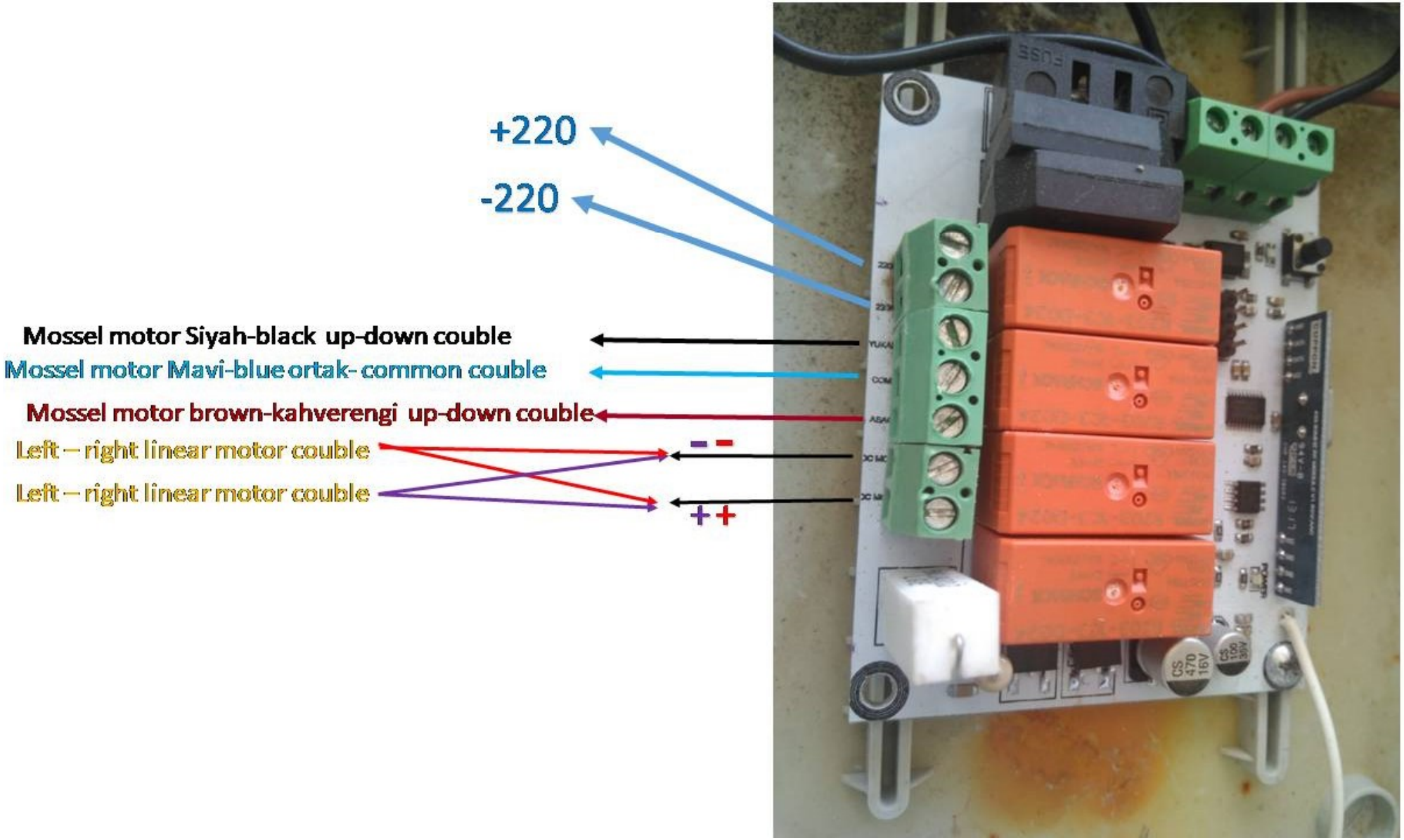
+220
-220
Mossel motor Siyah-black up-down couble
Mossel motor Mavi-blue ortak- common couble
Mossel motor brown-kahverengi up-down couble
Left – right linear motor couble
Left – right linear motor couble
- -
+ +

1- connect couble as in picture
2- push the middle button on remote control and reciver button at the same time 3-5 second

TUBE MOTOR TURNING EXTEND

WORNING! You have to chek motor turn extend before you fix triger belt. The tube has to turn as eros below when you push button to open. You have to change tube motor couble if tube turn oposite side.

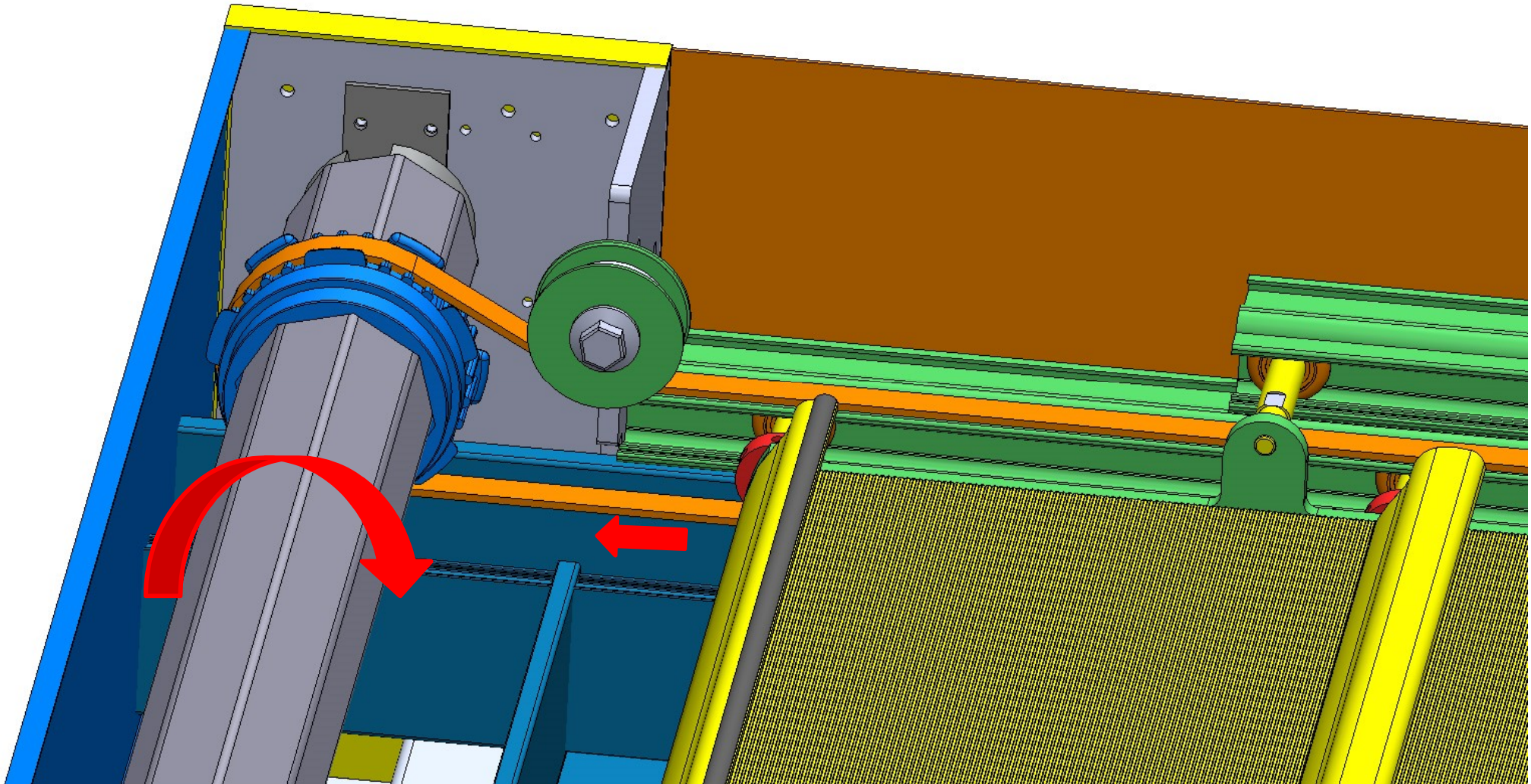

Manuel limit setting by stick of the mosel motor.

INSTALATION LINE FOR BIOCLIMATIC.

1- POST
2- GUTTER
3- RAIL PROFILES (RANNER)
4- MIDDLE BEAM (MORE THAN 400cm louver)
5- SMALL SIDE GUTTER LEFT-RIGHT (WE OFFER WITH SILICON)
6- BACK SMALL GUTTER
7- FRONT RABBER PROFILE
8- MOTOR BOX (ACCEPT TOP MOTOR CAP)
9- MOTOR TUBE AND ETC
10- LOUVERS
*Chek beam wheel if it longer than 400cm. You have to fix yourself if it not ready on louver
11- LOUVERS LOCK FOR FIXED LOUVER
12- WIRE OF LOUVER
13- CONTROL RECIVER AND MOTOR EXTEND
14- TENSION
15- TRIGER BELT
16- MOTOR LIMIT SETTING FROM MOTOR BY STICK
17- COVER MOTOR BOZ CAP
18- 80*20mm L PROFILE ON FIX LOUVER
19- 120*20 L PROFILE FOR HIDE LINEAR MOTOR AND COUBLE
20- FRONT AND BACK GUTTER CAP
21- SILICON
22- LED LIGHT

BEAM LOADS

G : *Dead load from secondary beam system or purlins*

Q : *Live load from secondary beam system or purlins*

W : *Wind load from secondary beam system or purlins*

P : *Point load*

q : *Distributed load*

a : *Distance of load to beam left end*

b : *Distance of load to beam right end*

Load Type : *Where the load on the beam is received, g, q, w, etc.*

Load Value : *The value of the load as a distributed load or as a single load*

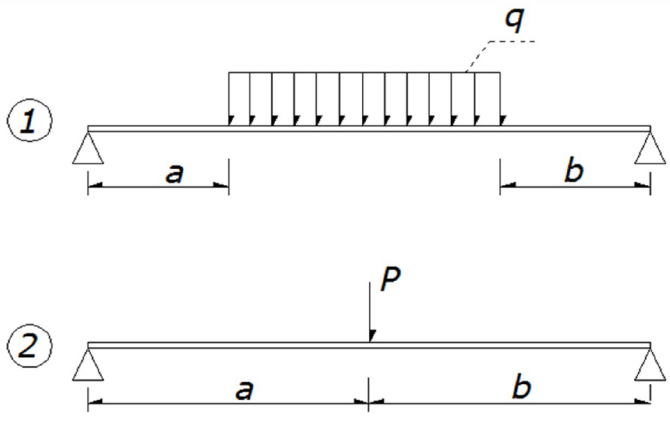

LOADS ACTING ON SHEETINGS

Sheeting	Unit Weight [tf/m²]	Snow Load [tf/m²]	Live load [tf/m²]	User Defined Wind Loads +X [tf/m²]	-X [tf/m²]	+Y [tf/m²]	-Y [tf/m²]
ZEMİN KAT							
	0.030	0.7	0	0	0	0	0

Beam	Load Type	*	Load	a [cm]	b [cm]
K1	Own load	1	0.116 tf/m	0	0
	Purlin Loads (G)	2	0.030 tf	528.6	12.9
	Purlin Loads (G)	2	0.030 tf	515.7	25.8
	Purlin Loads (G)	2	0.030 tf	489.9	51.6
	Purlin Loads (G)	2	0.030 tf	464.1	77.4
	Purlin Loads (G)	2	0.030 tf	438.4	103.1
	Purlin Loads (G)	2	0.030 tf	412.6	128.9
	Purlin Loads (G)	2	0.030 tf	386.8	154.7
	Purlin Loads (G)	2	0.030 tf	361	180.5
	Purlin Loads (G)	2	0.030 tf	335.2	206.3
	Purlin Loads (G)	2	0.030 tf	309.4	232.1
	Purlin Loads (G)	2	0.030 tf	283.6	257.9
	Purlin Loads (G)	2	0.030 tf	257.9	283.6
	Purlin Loads (G)	2	0.030 tf	232.1	309.4
	Purlin Loads (G)	2	0.030 tf	206.3	335.2
	Purlin Loads (G)	2	0.030 tf	180.5	361
	Purlin Loads (G)	2	0.030 tf	154.7	386.8
	Purlin Loads (G)	2	0.030 tf	128.9	412.6
	Purlin Loads (G)	2	0.030 tf	103.1	438.4
	Purlin Loads (G)	2	0.030 tf	77.4	464.1
	Purlin Loads (G)	2	0.030 tf	51.6	489.9
	Purlin Loads (G)	2	0.030 tf	25.8	515.7
	Purlin Loads (G)	2	0.030 tf	12.9	528.6
K3	Own load	1	0116 tf/m	0	0
	Purlin Loads (G)	2	0.030 tf	528.6	12.9
	Purlin Loads (G)	2	0.030 tf	515.7	25.8
	Purlin Loads (G)	2	0.030 tf	489.9	51.6
	Purlin Loads (G)	2	0.030 tf	464.1	77.4
	Purlin Loads (G)	2	0.030 tf	438.4	103.1
	Purlin Loads (G)	2	0.030 tf	412.6	128.9
	Purlin Loads (G)	2	0.030 tf	386.8	154.7
	Purlin Loads (G)	2	0.030 tf	361	180.5
	Purlin Loads (G)	2	0.030 tf	335.2	206.3
	Purlin Loads (G)	2	0.030 tf	309.4	232.1
	Purlin Loads (G)	2	0.030 tf	283.6	257.9

Beam	Load Type	*	Load	a [cm]	b [cm]
K2	Own load	1	0.116 tf/m	0	0
	Purlin Loads (G)	2	0.010 tf	12.9	528.6
	Purlin Loads (G)	2	0.010 tf	25.8	515.7
	Purlin Loads (G)	2	0.017 tf	51.6	489.9
	Purlin Loads (G)	2	0.013 tf	77.4	464.1
	Purlin Loads (G)	2	0.013 tf	103.1	438.4
	Purlin Loads (G)	2	0.013 tf	128.9	412.6
	Purlin Loads (G)	2	0.013 tf	154.7	386.8
	Purlin Loads (G)	2	0.013 tf	180.5	361
	Purlin Loads (G)	2	0.013 tf	206.3	335.2
	Purlin Loads (G)	2	0.013 tf	232.1	309.4
	Purlin Loads (G)	2	0.013 tf	257.9	283.6
	Purlin Loads (G)	2	0.013 tf	283.6	257.9
	Purlin Loads (G)	2	0.013 tf	309.4	232.1
	Purlin Loads (G)	2	0.013 tf	335.2	206.3
	Purlin Loads (G)	2	0.013 tf	361	180.5
	Purlin Loads (G)	2	0.013 tf	386.8	154.7
	Purlin Loads (G)	2	0.013 tf	412.6	128.9
	Purlin Loads (G)	2	0.013 tf	438.4	103.1
	Purlin Loads (G)	2	0.013 tf	464.1	77.4
	Purlin Loads (G)	2	0.017 tf	489.9	51.6
	Purlin Loads (G)	2	0.010 tf	515.7	25.8
	Purlin Loads (G)	2	0.010 tf	528.6	12.9
K4	Own load	1	0.116 tf/m	0	0
	Purlin Loads (G)	2	0.030 tf	528.6	12.9
	Purlin Loads (G)	2	0.030 tf	515.7	25.8
	Purlin Loads (G)	2	0.030 tf	489.9	51.6
	Purlin Loads (G)	2	0.030 tf	464.1	77.4
	Purlin Loads (G)	2	0.030 tf	438.4	103.1
	Purlin Loads (G)	2	0.030 tf	412.6	128.9
	Purlin Loads (G)	2	0.030 tf	386.8	154.7
	Purlin Loads (G)	2	0.030 tf	361	180.5
	Purlin Loads (G)	2	0.030 tf	335.2	206.3
	Purlin Loads (G)	2	0.030 tf	309.4	232.1
	Purlin Loads (G)	2	0.030 tf	283.6	257.9

Beam	Load Type	*	Load	a [cm]	b [cm]
	Purlin Loads (G)	2	0.030 tf	257.9	283.6
	Purlin Loads (G)	2	0.030 tf	232.1	309.4
	Purlin Loads (G)	2	0.030 tf	206.3	335.2
	Purlin Loads (G)	2	0.030 tf	180.5	361
	Purlin Loads (G)	2	0.030 tf	154.7	386.8
	Purlin Loads (G)	2	0.030 tf	128.9	412.6
	Purlin Loads (G)	2	0.030 tf	103.1	438.4
	Purlin Loads (G)	2	0.030 tf	77.4	464.1
	Purlin Loads (G)	2	0.030 tf	51.6	489.9
	Purlin Loads (G)	2	0.030 tf	25.8	515.7
	Purlin Loads (G)	2	0.030 tf	12.9	528.6
K5	Own load	1	0.116 tf/m	0	0
	Purlin Loads (G)	2	0.030 tf	528.6	12.9
	Purlin Loads (G)	2	0.030 tf	515.7	25.8
	Purlin Loads (G)	2	0.040 tf	489.9	51.6
	Purlin Loads (G)	2	0.040 tf	464.1	77.4
	Purlin Loads (G)	2	0.040 tf	438.4	103.1
	Purlin Loads (G)	2	0.040 tf	412.6	128.9
	Purlin Loads (G)	2	0.040 tf	386.8	154.7
	Purlin Loads (G)	2	0.040 tf	361	180.5
	Purlin Loads (G)	2	0.040 tf	335.2	206.3
	Purlin Loads (G)	2	0.040 tf	309.4	232.1
	Purlin Loads (G)	2	0.040 tf	283.6	257.9
	Purlin Loads (G)	2	0.040 tf	257.9	283.6
	Purlin Loads (G)	2	0.040 tf	232.1	309.4
	Purlin Loads (G)	2	0.040 tf	206.3	335.2
	Purlin Loads (G)	2	0.040 tf	180.5	361
	Purlin Loads (G)	2	0.040 tf	154.7	386.8
	Purlin Loads (G)	2	0.040 tf	128.9	412.6
	Purlin Loads (G)	2	0.030 tf	103.1	438.4
	Purlin Loads (G)	2	0.040 tf	77.4	464.1
	Purlin Loads (G)	2	0.030 tf	51.6	489.9
	Purlin Loads (G)	2	0.030 tf	25.8	515.7
	Purlin Loads (G)	2	0.030 tf	12.9	528.6
K7	Own load	1	0.116 tf/m	0	0
	Purlin Loads (G)	2	0.030 tf	528.6	12.9
	Purlin Loads (G)	2	0.030 tf	515.7	25.8
	Purlin Loads (G)	2	0.030 tf	489.9	51.6
	Purlin Loads (G)	2	0.030 tf	464.1	77.4
	Purlin Loads (G)	2	0.030 tf	438.4	103.1
	Purlin Loads (G)	2	0.030 tf	412.6	128.9
	Purlin Loads (G)	2	0.030 tf	386.8	154.7
	Purlin Loads (G)	2	0.030 tf	361	180.5
	Purlin Loads (G)	2	0.030 tf	335.2	206.3
	Purlin Loads (G)	2	0.030 tf	309.4	232.1
	Purlin Loads (G)	2	0.030 tf	283.6	257.9
	Purlin Loads (G)	2	0.030 tf	257.9	283.6
	Purlin Loads (G)	2	0.030 tf	232.1	309.4
	Purlin Loads (G)	2	0.030 tf	206.3	335.2
	Purlin Loads (G)	2	0.030 tf	180.5	361
	Purlin Loads (G)	2	0.030 tf	154.7	386.8
	Purlin Loads (G)	2	0.030 tf	128.9	412.6
	Purlin Loads (G)	2	0.030 tf	103.1	438.4
	Purlin Loads (G)	2	0.030 tf	77.4	464.1
	Purlin Loads (G)	2	0.030 tf	51.6	489.9
	Purlin Loads (G)	2	0.030 tf	25.8	515.7
	Purlin Loads (G)	2	0.030 tf	12.9	528.6
K9	Own load	1	0.116 tf/m	0	0
	Purlin Loads (G)	2	0.040 tf	528.6	12.9
	Purlin Loads (G)	2	0.040 tf	515.7	25.8
	Purlin Loads (G)	2	0.040 tf	489.9	51.6
	Purlin Loads (G)	2	0.040 tf	464.1	77.4
	Purlin Loads (G)	2	0.040 tf	438.4	103.1
	Purlin Loads (G)	2	0.040 tf	412.6	128.9
	Purlin Loads (G)	2	0.040 tf	386.8	154.7
	Purlin Loads (G)	2	0.040 tf	361	180.5
	Purlin Loads (G)	2	0.040 tf	335.2	206.3
	Purlin Loads (G)	2	0.040 tf	309.4	232.1
	Purlin Loads (G)	2	0.040 tf	283.6	257.9
	Purlin Loads (G)	2	0.040 tf	257.9	283.6

Beam	Load Type	*	Load	a [cm]	b [cm]
	Purlin Loads (G)	2	0.030 tf	257.9	283.6
	Purlin Loads (G)	2	0.030 tf	232.1	309.4
	Purlin Loads (G)	2	0.030 tf	206.3	335.2
	Purlin Loads (G)	2	0.030 tf	180.5	361
	Purlin Loads (G)	2	0.030 tf	154.7	386.8
	Purlin Loads (G)	2	0.030 tf	128.9	412.6
	Purlin Loads (G)	2	0.030 tf	103.1	438.4
	Purlin Loads (G)	2	0.030 tf	77.4	464.1
	Purlin Loads (G)	2	0.030 tf	51.6	489.9
	Purlin Loads (G)	2	0.030 tf	25.8	515.7
	Purlin Loads (G)	2	0.030 tf	12.9	528.6
K6	Own load	1	0.116 tf/m	0	0
	Purlin Loads (G)	2	0.029 tf	12.9	528.6
	Purlin Loads (G)	2	0.029 tf	25.8	515.7
	Purlin Loads (G)	2	0.049 tf	51.6	489.9
	Purlin Loads (G)	2	0.039 tf	77.4	464.1
	Purlin Loads (G)	2	0.039 tf	103.1	438.4
	Purlin Loads (G)	2	0.039 tf	128.9	412.6
	Purlin Loads (G)	2	0.039 tf	154.7	386.8
	Purlin Loads (G)	2	0.039 tf	180.5	361
	Purlin Loads (G)	2	0.039 tf	206.3	335.2
	Purlin Loads (G)	2	0.039 tf	232.1	309.4
	Purlin Loads (G)	2	0.039 tf	257.9	283.6
	Purlin Loads (G)	2	0.039 tf	283.6	257.9
	Purlin Loads (G)	2	0.039 tf	309.4	232.1
	Purlin Loads (G)	2	0.039 tf	335.2	206.3
	Purlin Loads (G)	2	0.039 tf	361	180.5
	Purlin Loads (G)	2	0.039 tf	386.8	154.7
	Purlin Loads (G)	2	0.039 tf	412.6	128.9
	Purlin Loads (G)	2	0.039 tf	438.4	103.1
	Purlin Loads (G)	2	0.039 tf	464.1	77.4
	Purlin Loads (G)	2	0.049 tf	489.9	51.6
	Purlin Loads (G)	2	0.029 tf	515.7	25.8
	Purlin Loads (G)	2	0.029 tf	528.6	12.9
K8	Own load	1	0.116 tf/m	0	0
	Purlin Loads (G)	2	0.040 tf	528.6	12.9
	Purlin Loads (G)	2	0.040 tf	515.7	25.8
	Purlin Loads (G)	2	0.040 tf	489.9	51.6
	Purlin Loads (G)	2	0.040 tf	464.1	77.4
	Purlin Loads (G)	2	0.040 tf	438.4	103.1
	Purlin Loads (G)	2	0.040 tf	412.6	128.9
	Purlin Loads (G)	2	0.040 tf	386.8	154.7
	Purlin Loads (G)	2	0.040 tf	361	180.5
	Purlin Loads (G)	2	0.040 tf	335.2	206.3
	Purlin Loads (G)	2	0.040 tf	309.4	232.1
	Purlin Loads (G)	2	0.040 tf	283.6	257.9
	Purlin Loads (G)	2	0.040 tf	257.9	283.6
	Purlin Loads (G)	2	0.040 tf	232.1	309.4
	Purlin Loads (G)	2	0.040 tf	206.3	335.2
	Purlin Loads (G)	2	0.040 tf	180.5	361
	Purlin Loads (G)	2	0.040 tf	154.7	386.8
	Purlin Loads (G)	2	0.040 tf	128.9	412.6
	Purlin Loads (G)	2	0.040 tf	103.1	438.4
	Purlin Loads (G)	2	0.040 tf	77.4	464.1
	Purlin Loads (G)	2	0.040 tf	51.6	489.9
	Purlin Loads (G)	2	0.040 tf	25.8	515.7
	Purlin Loads (G)	2	0.040 tf	12.9	528.6
K10	Own load	1	0.116 tf/m	0	0
	Purlin Loads (G)	2	0.010 tf	12.9	528.6
	Purlin Loads (G)	2	0.010 tf	25.8	515.7
	Purlin Loads (G)	2	0.017 tf	51.6	489.9
	Purlin Loads (G)	2	0.013 tf	77.4	464.1
	Purlin Loads (G)	2	0.013 tf	103.1	438.4
	Purlin Loads (G)	2	0.013 tf	128.9	412.6
	Purlin Loads (G)	2	0.013 tf	154.7	386.8
	Purlin Loads (G)	2	0.013 tf	180.5	361
	Purlin Loads (G)	2	0.013 tf	206.3	335.2
	Purlin Loads (G)	2	0.013 tf	232.1	309.4
	Purlin Loads (G)	2	0.013 tf	257.9	283.6
	Purlin Loads (G)	2	0.013 tf	283.6	257.9

Beam	Load Type	*	Load	a [cm]	b [cm]
	Purlin Loads (G)	2	0.030 tf	232.1	309.4
	Purlin Loads (G)	2	0.030 tf	206.3	335.2
	Purlin Loads (G)	2	0.030 tf	180.5	361
	Purlin Loads (G)	2	0.030 tf	154.7	386.8
	Purlin Loads (G)	2	0.030 tf	128.9	412.6
	Purlin Loads (G)	2	0.030 tf	103.1	438.4
	Purlin Loads (G)	2	0.030 tf	77.4	464.1
	Purlin Loads (G)	2	0.030 tf	51.6	489.9
	Purlin Loads (G)	2	0.030 tf	25.8	515.7
	Purlin Loads (G)	2	0.030 tf	12.9	528.6
K11	Own load	1	0.115 tf/m	0	0
	Purlin Loads (G)	2	0.040 tf	528.6	12.9
	Purlin Loads (G)	2	0.040 tf	515.7	25.8
	Purlin Loads (G)	2	0.040 tf	489.9	51.6
	Purlin Loads (G)	2	0.040 tf	464.1	77.4
	Purlin Loads (G)	2	0.040 tf	438.4	103.1
	Purlin Loads (G)	2	0.040 tf	412.6	128.9
	Purlin Loads (G)	2	0.040 tf	386.8	154.7
	Purlin Loads (G)	2	0.040 tf	361	180.5
	Purlin Loads (G)	2	0.040 tf	335.2	206.3
	Purlin Loads (G)	2	0.040 tf	309.4	232.1
	Purlin Loads (G)	2	0.040 tf	283.6	257.9
	Purlin Loads (G)	2	0.040 tf	257.9	283.6
	Purlin Loads (G)	2	0.040 tf	232.1	309.4
	Purlin Loads (G)	2	0.040 tf	206.3	335.2
	Purlin Loads (G)	2	0.040 tf	180.5	361
	Purlin Loads (G)	2	0.040 tf	154.7	386.8
	Purlin Loads (G)	2	0.040 tf	128.9	412.6
	Purlin Loads (G)	2	0.040 tf	103.1	438.4
	Purlin Loads (G)	2	0.040 tf	77.4	464.1
	Purlin Loads (G)	2	0.040 tf	51.6	489.9
	Purlin Loads (G)	2	0.040 tf	25.8	515.7
	Purlin Loads (G)	2	0.040 tf	12.9	528.6
K13	Own load	1	0.116 tf/m	0	0
K15	Own load	1	0.116 tf/m	0	0
K17	Own load	1	0.116 tf/m	0	0
K19	Own load	1	0.116 tf/m	0	0
K21	Own load	1	0.116 tf/m	0	0

Beam	Load Type	*	Load	a [cm]	b [cm]
	Purlin Loads (G)	2	0.013 tf	309.4	232.1
	Purlin Loads (G)	2	0.013 tf	335.2	206.3
	Purlin Loads (G)	2	0.013 tf	361	180.5
	Purlin Loads (G)	2	0.013 tf	386.8	154.7
	Purlin Loads (G)	2	0.013 tf	412.6	128.9
	Purlin Loads (G)	2	0.013 tf	438.4	103.1
	Purlin Loads (G)	2	0.013 tf	464.1	77.4
	Purlin Loads (G)	2	0.017 tf	489.9	51.6
	Purlin Loads (G)	2	0.010 tf	515.7	25.8
	Purlin Loads (G)	2	0.010 tf	528.6	12.9
K12	Own load	1	0.116 tf/m	0	0
	Purlin Loads (G)	2	0.030 tf	528.6	12.9
	Purlin Loads (G)	2	0.030 tf	515.7	25.8
	Purlin Loads (G)	2	0.030 tf	489.9	51.6
	Purlin Loads (G)	2	0.030 tf	464.1	77.4
	Purlin Loads (G)	2	0.030 tf	438.4	103.1
	Purlin Loads (G)	2	0.030 tf	412.6	128.9
	Purlin Loads (G)	2	0.030 tf	386.8	154.7
	Purlin Loads (G)	2	0.030 tf	361	180.5
	Purlin Loads (G)	2	0.030 tf	335.2	206.3
	Purlin Loads (G)	2	0.030 tf	309.4	232.1
	Purlin Loads (G)	2	0.030 tf	283.6	257.9
	Purlin Loads (G)	2	0.030 tf	257.9	283.6
	Purlin Loads (G)	2	0.030 tf	232.1	309.4
	Purlin Loads (G)	2	0.030 tf	206.3	335.2
	Purlin Loads (G)	2	0.030 tf	180.5	361
	Purlin Loads (G)	2	0.030 tf	154.7	386.8
	Purlin Loads (G)	2	0.030 tf	128.9	412.6
	Purlin Loads (G)	2	0.030 tf	103.1	438.4
	Purlin Loads (G)	2	0.030 tf	77.4	464.1
	Purlin Loads (G)	2	0.030 tf	51.6	489.9
	Purlin Loads (G)	2	0.030 tf	25.8	515.7
	Purlin Loads (G)	2	0.030 tf	12.9	528.6
K14	Own load	1	0.116 tf/m	0	0
K16	Own load	1	0.116 tf/m	0	0
K18	Own load	1	0.116 tf/m	0	0
K20	Own load	1	0.116 tf/m	0	0
K22	Own load	1	0.116 tf/m	0	0

BEAM COMBINED FORCES DESIGN CHECK

P_u : *The available axial compressive strength*

P_n/Ω : *The allowable compressive strength*

M_u : *The available flexural strength*

M_n/Ω : *The allowable flexural strength*

λ : *Slenderness ratio*

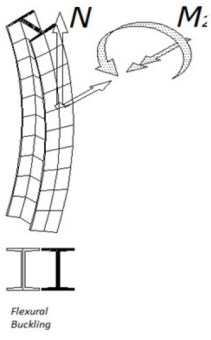

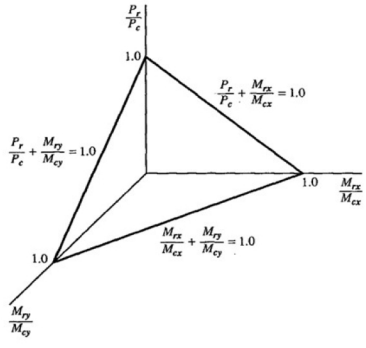

Beam	Design Point [m]	Axial Pu [tf]	Axial Pn/Ω [tf]	Major Axis Bending Mu [tfm]	Major Axis Bending Mn/Ω [tfm]	Minor Axis Bending Mu [tfm]	Minor Axis Bending Mn/Ω [tfm]	Check Interaction Equation	Check Ratio <1
K1_1 (PRF2)	5.41	0	0	0	1.75	0	0.32	(11.1b)	0.43
G-0.7Ex									√
K2_1 (PRF2)	5.41	-0.03	0	0	1.75	-0.08	0.32	(11.1a)	0.87
G-0.7Ex									√
K3_1 (PRF2)	0	0	0	0	1.75	0	0.32	(11.1a)	0.87
G-0.7Ex									√
K4_1 (PRF2)	5.41	0	0	0	1.75	0	0.32	(11.1a)	0.87
G-0.7Ex									√
K5_1 (PRF2)	5.41	0.01	0	0	1.75	0.03	0.32	(11.1a)	0.43
G-0.7Ex									√
K6_1 (PRF2)	5.41	-0.17	0	0	1.75	0.36	0.32	(11.1a)	0.87
G-0.7Ex									√
K7_1 (PRF2)	0	0.01	0	0	1.75	0.03	0.32	(11.1a)	0.87
G-0.7Ex									√
K8_1 (PRF2)	0.45	0	0	0	1.75	0	0.32	(11.1a)	0.87
G-0.7Ex									√
K9_1 (PRF2)	5.41	0	0	0	1.75	0.01	0.32	(11.1a)	0.43
G-0.7Ex									√
K10_1 (PRF2)	5.41	-0.06	0	0	1.75	0.12	0.32	(11.1a)	0.87
G-0.7Ex									√
K11_1 (PRF2)	0	0	0	0	1.75	0.01	0.32	(11.1a)	0.87
G-0.7Ex									√
K12_1 (PRF2)	0	0	0	0	1.75	0	0.32	(11.1a)	0.87
G-0.7Ex									√
K13_1 (PRF2)	4.18	0	0	0	1.75	0	0.32	(11.1a)	0.32
G-0.7Ex									√
K14_1 (PRF2)	4.18	0	0	0	1.75	0	0.32	(11.1a)	0.32
G-0.7Ey									√
K15_1 (PRF2)	0	-0.01	0	0	1.75	0	0.32	(11.1a)	0.32
G-0.7Ey									√
K16_1 (PRF2)	4.18	-0.01	0	0	1.75	0	0.32	(11.1a)	0.32
G-0.7Ey									√
K17_1 (PRF2)	0	-0.01	0	0	1.75	0	0.32	(11.1a)	0.32
G-0.7Ey									√
K18_1 (PRF2)	4.18	-0.01	0	0	1.75	0	0.32	(11.1a)	0.32
G-0.7Ey									√
K19_1 (PRF2)	4.18	0	0	0	1.75	0	0.32	(11.1a)	0.32
G-0.7Ey									√
K20_1 (PRF2)	0	0	0	0	1.75	0	0.32	(11.1a)	0.32
G-0.7Ey									√
K21_1 (PRF2)	4.18	0	0	0	1.75	0	0.32	(11.1a)	0.32
G-0.7Ex									√
K22_1 (PRF2)	4.18	0	0	0	1.75	0	0.32	(11.1a)	0.32
G-0.7Ey									√

BEAM SHEAR DESIGN CHECK

Ω *: Safety factor for shear*

V_n *: The nominal shear strength*

V_n /Ω *: The allowable shear strength*

V_u *: The available shear strength*

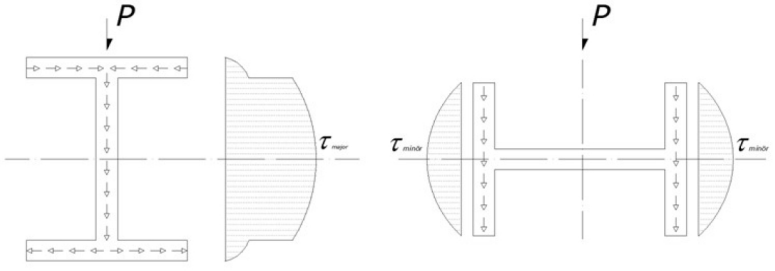

Beam	Axis	Combination	Vu [tf]	Vn/Ω [tf]	Vu/(Vn/Ω)	Vu/(Vn/Ω) <1
K1_1	Major Axis	G+0.7Ex	0	1.92	0.000	√
PRF2	Minor Axis	G-0.7Ex	0	4.54	0.000	√
K2_1	Major Axis	G+0.7Ey	0	1.92	0.002	√
PRF2	Minor Axis	G-0.7Ex	-0.14	4.54	0.032	√
K3_1	Major Axis	G-0.7Ey	0	1.92	0.000	√
PRF2	Minor Axis	G+0.7Ex	0	4.54	0.000	√
K4_1	Major Axis	G-0.7Ey	0	1.92	0.000	√
PRF2	Minor Axis	G-0.7Ey	0	4.54	0.000	√
K5_1	Major Axis	G+0.7Ex	0	1.92	0.000	√
PRF2	Minor Axis	G-0.7Ex	-0.01	4.54	0.002	√
K6_1	Major Axis	G+0.7Ex	0	1.92	0.000	√
PRF2	Minor Axis	G-0.7Ex	-0.42	4.54	0.093	√
K7_1	Major Axis	G-0.7Ex	0	1.92	0.000	√
PRF2	Minor Axis	G+0.7Ex	0.01	4.54	0.002	√
K8_1	Major Axis	G-0.7Ex	0	1.92	0.000	√
PRF2	Minor Axis	G-0.7Ex	0	4.54	0.000	√
K9_1	Major Axis	G-0.7Ex	0	1.92	0.000	√
PRF2	Minor Axis	G-0.7Ex	0	4.54	0.001	√
K10_1	Major Axis	G-0.7Ex	0	1.92	0.000	√
PRF2	Minor Axis	G-0.7Ex	-0.14	4.54	0.031	√
K11_1	Major Axis	G+0.7Ex	0	1.92	0.000	√
PRF2	Minor Axis	G+0.7Ex	0	4.54	0.001	√
K12_1	Major Axis	G+0.7Ex	0	1.92	0.000	√
PRF2	Minor Axis	G-0.7Ex	0	4.54	0.000	√
K13_1	Major Axis	G+0.7Ex	0	1.92	0.000	√
PRF2	Minor Axis	G-0.7Ey	0	4.54	0.000	√
K14_1	Major Axis	G-0.7Ex	0	1.92	0.000	√
PRF2	Minor Axis	G+0.7Ey	0	4.54	0.000	√
K15_1	Major Axis	G+0.7Ex	0	1.92	0.000	√
PRF2	Minor Axis	G-0.7Ey	0	4.54	0.000	√
K16_1	Major Axis	G-0.7Ex	0	1.92	0.000	√
PRF2	Minor Axis	G-0.7Ey	0	4.54	0.000	√
K17_1	Major Axis	G-0.7Ex	0	1.92	0.000	√
PRF2	Minor Axis	G-0.7Ey	0	4.54	0.000	√
K18_1	Major Axis	G+0.7Ex	0	1.92	0.000	√
PRF2	Minor Axis	G+0.7Ey	0	4.54	0.000	√
K19_1	Major Axis	G-0.7Ex	0	1.92	0.000	√
PRF2	Minor Axis	G-0.7Ey	0	4.54	0.000	√
K20_1	Major Axis	G+0.7Ex	0	1.92	0.000	√
PRF2	Minor Axis	G+0.7Ey	0	4.54	0.000	√
K21_1	Major Axis	G-0.7Ex	0	1.92	0.000	√
PRF2	Minor Axis	G-0.7Ey	0	4.54	0.000	√
K22_1	Major Axis	G+0.7Ex	0	1.92	0.000	√
PRF2	Minor Axis	G+0.7Ey	0	4.54	0.000	√

STEEL BEAM DEFLECTION CHECK

$\delta_i < l/360$

δ_i : *Deflection*

ln : *The span length from support to support*

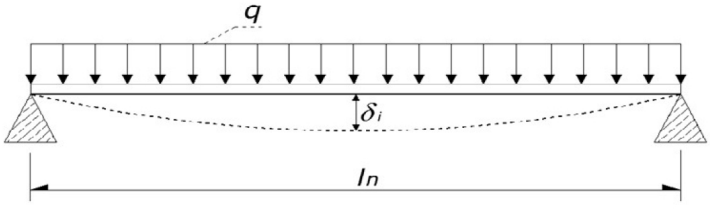

Beam	Com.	ln [m]	δi [mm]	Check δi<limit		Beam	Com.	ln [m]	δi [mm]	Check δi<limit	
K1_1 (PRF2)	--	5	0	0.0<15.0 (l/360)	√	K2_1 (PRF2)	--	5	0	0.0<15.0 (l/360)	√
K3_1 (PRF2)	--	5	0	0.0<15.0 (l/360)	√	K4_1 (PRF2)	--	5	0	0.0<15.0 (l/360)	√
K5_1 (PRF2)	--	5	0	0.0<15.0 (l/360)	√	K6_1 (PRF2)	--	5	0	0.0<15.0 (l/360)	√
K7_1 (PRF2)	--	5	0	0.0<15.0 (l/360)	√	K8_1 (PRF2)	--	5	0	0.0<15.0 (l/360)	√
K9_1 (PRF2)	--	5	0	0.0<15.0 (l/360)	√	K10_1 (PRF2)	--	5	0	0.0<15.0 (l/360)	√
K11_1 (PRF2)	--	5	0	0.0<15.0 (l/360)	√	K12_1 (PRF2)	--	5	0	0.0<15.0 (l/360)	√
K13_1 (PRF2)	--	4	0	0.0<11.6 (l/360)	√	K14_1 (PRF2)	--	4	0	0.0<11.6 (l/360)	√
K15_1 (PRF2)	--	4	0	0.0<11.6 (l/360)	√	K16_1 (PRF2)	--	4	0	0.0<10.5 (l/400)	√
K17_1 (PRF2)	--	4	0	0.0<11.6 (l/360)	√	K18_1 (PRF2)	--	4	0	0.0<11.6 (l/360)	√
K19_1 (PRF2)	--	4	0	0.0<11.6 (l/360)	√	K20_1 (PRF2)	--	4	0	0.0<11.6 (l/360)	√
K21_1 (PRF2)	--	4	0	0.0<11.6 (l/360)	√	K22_1 (PRF2)	--	4	0	0.0<11.6 (l/360)	√

COLUMN INTRODUCTORY INFORMATION

h *: Height*

b *: Width*

t_w *: Web thickness*

t_f *: Flange thickness*

A *: Cross-sectional area*

I_y , I_z *: Moment of inertia for major and minor axis*

$W_{el.y}$, $W_{el.z}$ *: Elastic moment of resistance for major and minor axis*

$W_{pl.y}$, $W_{pl.z}$ *: Plastic moment of resistance for major and minor axis*

i_y , i_z *: Radius of gyration*

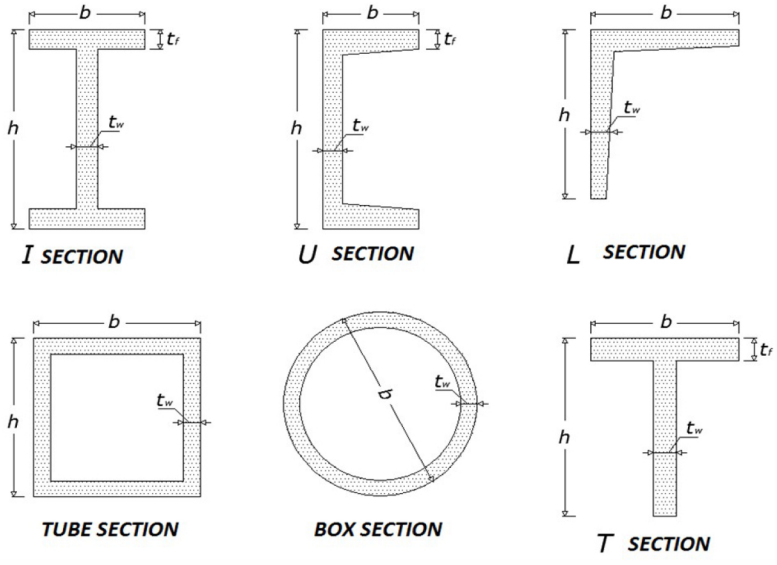

General Design Criteria	
Design Code Used For Steel Elements	ÇYTHYEDY (GKT)
Seismic Design Code	TBDY 2018
Used Analysis Method	Static Linear Analysis
Ductility	High Ductility
Safety Factor (Ω)	1.67

Materials Used On Column Elements						
Steel Grade	Yield Strength Fy [tf/m²]	Ultimate Strength Fu [tf/m²]	Modulus of Elasticity E [tf/m²]	Shear Modulus G [tf/m²]	Unit Weight [t/m³]	Coeff. of Thermal Exp. α
MAT1	16315.5	0	7.2	2.8	0.003	2.3E-6

Column Sections	Dimensions				Area	Strong Axis				Weak Axis			
Section	h [cm]	b [cm]	tw [cm]	tf [cm]	A [cm²]	Iy [cm4]	Wel.y [cm³]	Wpl.y [cm³]	iy [cm]	Iz [cm4]	Wel.z [cm³]	Wpl.z [cm³]	iz [cm]
PRF3	14	16	0.2	0.2	14.8	2090.9	68.7	77.8	5.71	2498.1	73.7	85.2	6.32

COLUMN LOADS

G : *Secondary beam system impact dead load*

Q : *Secondary beam system impact live load*

W : *Secondary beam system impact wind load*

P : *Point load of the column*

q : *Uniform load of the column*

a : *The distance between left support and the location of the load*

b : *The distance between right support and the location of the load*

Load Type : *The load where come from above the beam*

Load Value : *Numerical value of point or uniform load*

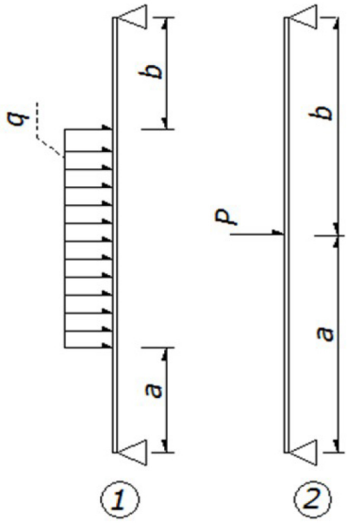

LOADS ACTING ON SHEETINGS

Sheeting	Unit Weight [tf/m²]	Snow Load [tf/m²]	Live load [tf/m²]	User Defined Wind Loads			
				+X [tf/m²]	-X [tf/m²]	+Y [tf/m²]	-Y [tf/m²]
ZEMİN KAT							
	0.030	0	0	0	0	0	0

Column	Load Type	*	Load	a [cm]	b [cm]	Column	Load Type	*	Load	a [cm]	b [cm]
S1	Own load	1	0.014 tf/m	0	0	S6	Own load	1	0.014 tf/m	0	0
S11	Own load	1	0.014 tf/m	0	0	S2	Own load	1	0.014 tf/m	0	0
S7	Own load	1	0.014 tf/m	0	0	S12	Own load	1	0.014 tf/m	0	0
S3	Own load	1	0.014 tf/m	0	0	S8	Own load	1	0.014 tf/m	0	0
S13	Own load	1	0.014 tf/m	0	0	S4	Own load	1	0.014 tf/m	0	0
S9	Own load	1	0.014 tf/m	0	0	S14	Own load	1	0.014 tf/m	0	0
S5	Own load	1	0.014 tf/m	0	0	S10	Own load	1	0.014 tf/m	0	0
S15	Own load	1	0.014 tf/m	0	0						

COLUMN COMBINED FORCES DESIGN CHECK

P_u : *The available axial compressive strength*

P_n/Ω : *The allowable compressive strength*

M_u : *The available flexural strength*

M_n/Ω : *The allowable flexural strength*

λ : *Slenderness ratio*

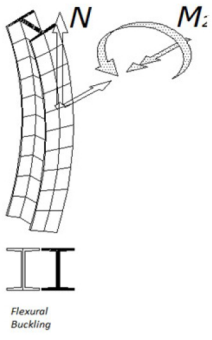

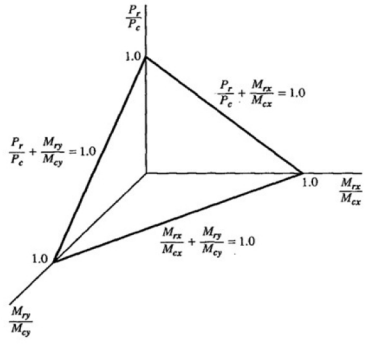

Column	Design Point [m]	Axial Pu [tf]	Axial Pn/Ω [tf]	Major Axis Bending Mu [tfm]	Major Axis Bending Mn/Ω [tfm]	Minor Axis Bending Mu [tfm]	Minor Axis Bending Mn/Ω [tfm]	Check Interaction Equation	Check Ratio <1
S1_1 (PRF3)	0	0	0	0	0.76	0	0.83	(11.1a)	0.96
G-0.7Ey									√
S6_1 (PRF3)	2.70	0.01	0	0	0.76	0.01	0.83	(11.11)	0.96
G-0.7Ex									√
S11_1 (PRF3)	2.70	0	0	0	0.76	0	0.83	(11.11)	0.88
G-0.7Ex									√
S2_1 (PRF3)	0	0	0	0	0.76	0	0.83	(11.11)	0.42
G+0.7Ex									√
S7_1 (PRF3)	2.70	-0.43	0	0	0.76	-0.33	0.83	(11.11)	0.46
G+0.7Ex									√
S12_1 (PRF3)	2.70	-0.14	0	0.02	0.76	-0.11	0.83	(11.11)	0.46
G+0.7Ex									√
S3_1 (PRF3)	2.70	0	0	-0.02	0.76	0.04	0.83	(11.11)	0.65
G+0.7Ey									√
S8_1 (PRF3)	2.70	-0.43	0	0	0.76	0.33	0.83	(11.11)	0.31
G-0.7Ex									√
S13_1 (PRF3)	2.70	-0.14	0	0.02	0.76	0.11	0.83	(11.11)	0.81
G-0.7Ex									√
S4_1 (PRF3)	0	0	0	0	0.76	0	0.83	(11.1a)	0.96
G-0.7Ex									√
S9_1 (PRF3)	2.70	0.01	0	0	0.76	-0.01	0.83	(11.11)	0.40
G+0.7Ex									√
S14_1 (PRF3)	2.70	0	0	0	0.76	0	0.83	(11.11)	0.88
G+0.7Ex									√
S5_1 (PRF3)	0	0	0	0	0.76	0	0.83	(11.11)	0.26
G-0.7Ex									√
S10_1 (PRF3)	0	0	0	0	0.76	0	0.83	(11.11)	0.59
G+0.7Ex									√
S15_1 (PRF3)	0	0	0	0	0.76	0	0.83	(11.11)	0.61
G+0.7Ex									√

COLUMN SHEAR DESIGN CHECK

***Ω* : Safety factor for shear**

***V_n* : The nominal shear strength**

***V_n /Ω* : The allowable shear strength**

***V_u* : The available shear strength**

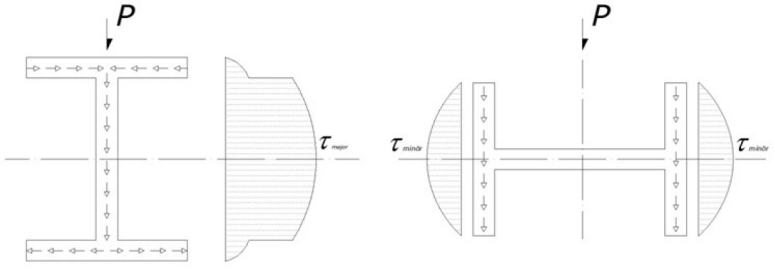

Column	Axis	Combination	Vu [tf]	Vn/Ω [tf]	Vu/(Vn/Ω)	Vu/(Vn/Ω) <1
S1_1	Major Axis	G-0.7Ey	0	0	0.001	√
PRF3	Minor Axis	G+0.7Ex	0	0	0.019	√
S6_1	Major Axis	G-0.7Ey	0	0	0.213	√
PRF3	Minor Axis	G-0.7Ex	-0.01	0	0.360	√
S11_1	Major Axis	G+0.7Ey	0	0	0.900	√
PRF3	Minor Axis	G-0.7Ex	0	0	0.947	√
S2_1	Major Axis	G+0.7Ey	0	0	0.776	√
PRF3	Minor Axis	G+0.7Ex	0	0	0.157	√
S7_1	Major Axis	G+0.7Ey	0	0	0.915	√
PRF3	Minor Axis	G+0.7Ex	0.18	0	0.078	√
S12_1	Major Axis	G-0.7Ey	-0.01	0	0.948	√
PRF3	Minor Axis	G+0.7Ex	0.06	0	0.604	√
S3_1	Major Axis	G+0.7Ey	0.01	0	0.512	√
PRF3	Minor Axis	G-0.7Ex	-0.02	0	0.500	√
S8_1	Major Axis	G+0.7Ey	0	0	0.551	√
PRF3	Minor Axis	G-0.7Ex	-0.18	0	0.012	√
S13_1	Major Axis	G-0.7Ey	-0.01	0	0.697	√
PRF3	Minor Axis	G-0.7Ex	-0.06	0	0.582	√
S4_1	Major Axis	G+0.7Ey	0	0	0.004	√
PRF3	Minor Axis	G+0.7Ex	0	0	0.679	√
S9_1	Major Axis	G-0.7Ey	0	0	0.454	√
PRF3	Minor Axis	G+0.7Ex	0.01	0	0.722	√
S14_1	Major Axis	G-0.7Ey	0	0	0.653	√
PRF3	Minor Axis	G+0.7Ex	0	0	0.748	√
S5_1	Major Axis	G+0.7Ey	0	0	0.380	√
PRF3	Minor Axis	G-0.7Ex	0	0	0.626	√
S10_1	Major Axis	G+0.7Ey	0	0	0.288	√
PRF3	Minor Axis	G+0.7Ex	0	0	0.335	√
S15_1	Major Axis	G-0.7Ey	0	0	0.107	√
PRF3	Minor Axis	G+0.7Ex	0	0	0.276	√

İDEA BIOKLİMATIK SYSTEM PROFILE CATALOGUE

PROFILE 1

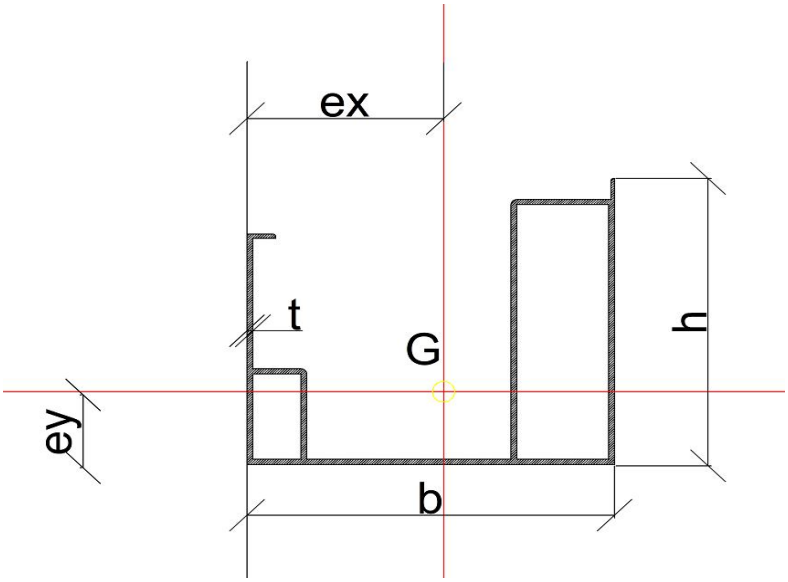

A	15.53
Ix	1531.66
Iy	427.74
ex	8.56
ey	3.46
t	0.25
b	16
h	13.6
cx	5.04
cy	10.14

A: Area
ex: Center of gravity "X" distance
ey: Center of gravity "Y" distance
G:ex: Center of gravity "
b: maximum width
h:maximum height
t:Thickness
Ix:"x" direction moment of inertia
Iy:"y" direction moment of inertia
cx:Distance of end point to neutral axis in " x" direction
cy:Distance of end point to neutral axis in "y" direction

TYPE OF SUPPORT

PROFILE 2

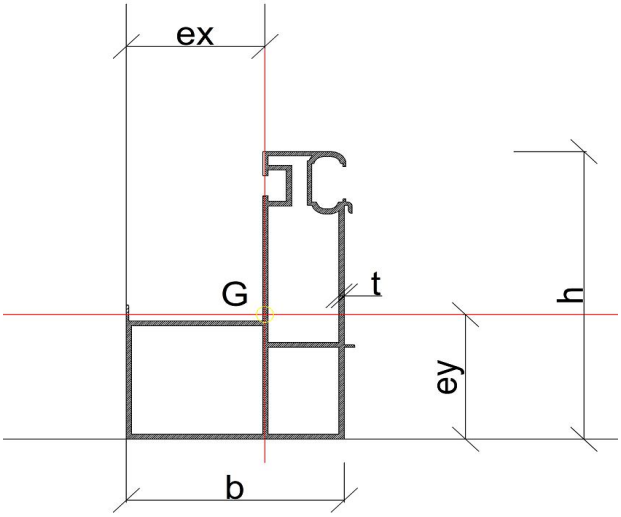

A	23.24
Ix	1249.23
Iy	1582.15
ex	7.95
ey	7.8
t	0.3
b	12.5
h	18
cx	4.55
cy	10.2

A: Area
ex: Center of gravity "X" distance
ey: Center of gravity "Y" distance
G:ex: Center of gravity "
b: maximum width
h:maximum height
t:Thickness
Ix:"x" direction moment of inertia
Iy:"y" direction moment of inertia
cx:Distance of end point to neutral axis in " x" direction
cy:Distance of end point to neutral axis in "y" direction

TYPE OF SUPPORT

PROFILE 3

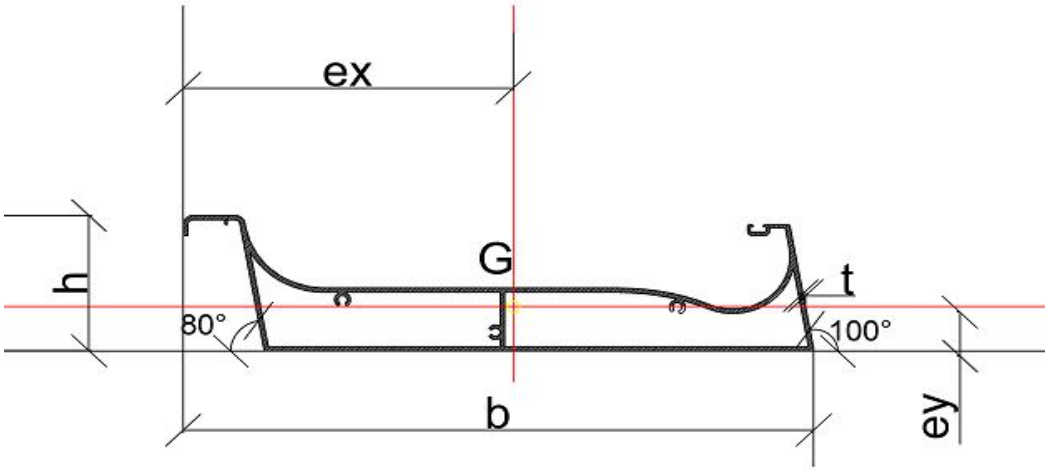

A	15.16
Ix	1374.27
Iy	57.78
ex	10.97
ey	2.089
t	0.2
b	27.5
h	6.43
cx	16.53
cy	4.341

A: Area
ex: Center of gravity "X" distance
ey: Center of gravity "Y" distance
G:ex: Center of gravity "
b: maximum width
h:maximum height
t:Thickness
Ix:"x" direction moment of inertia
Iy:"y" direction moment of inertia
cx:Distance of end point to neutral axis in " x" direction
cy:Distance of end point to neutral axis in "y" direction

TYPE OF SUPPORT

PROFILE 4

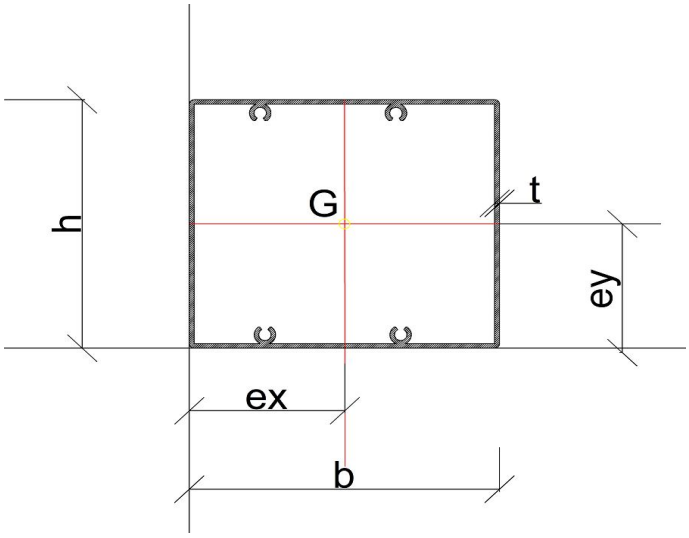

A	16.72
Ix	2498.1
Iy	2090.91
ex	8
ey	7
t	0.25
b	16
h	14
cx	8
cy	7

A: Area
ex: Center of gravity "X" distance
ey: Center of gravity "Y" distance
G:ex: Center of gravity "
b: maximum width
h:maximum height
t:Thickness
Ix:"x" direction moment of inertia
Iy:"y" direction moment of inertia
cx:Distance of end point to neutral axis in " x" direction
cy:Distance of end point to neutral axis in "y" direction

TYPE OF SUPPORT

PROFILE 5

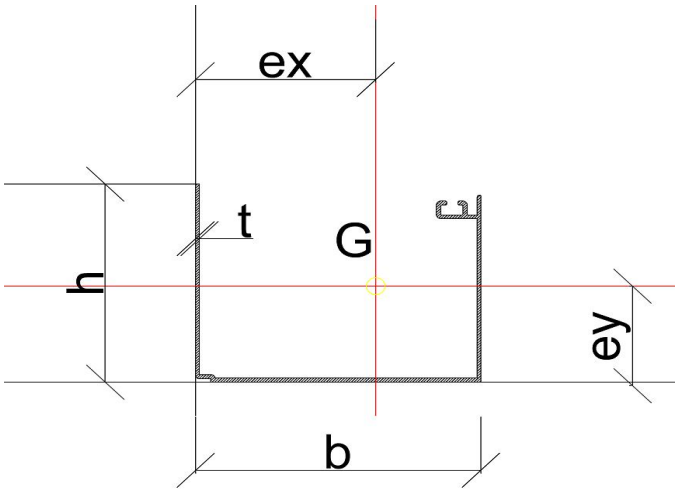

A	5.07
Ix	114.39
Iy	45.71
ex	4.23
ey	7.76
t	0.15
b	11.56
h	8.72
cx	7.33
cy	0.96

A: Area
ex: Center of gravity "X" distance
ey: Center of gravity "Y" distance
G:ex: Center of gravity "
b: maximum width
h:maximum height
t:Thickness
Ix:"x" direction moment of inertia
Iy:"y" direction moment of inertia
cx:Distance of end point to neutral axis in " x" direction
cy:Distance of end point to neutral axis in "y" direction

TYPE OF SUPPORT

PROFILE 6

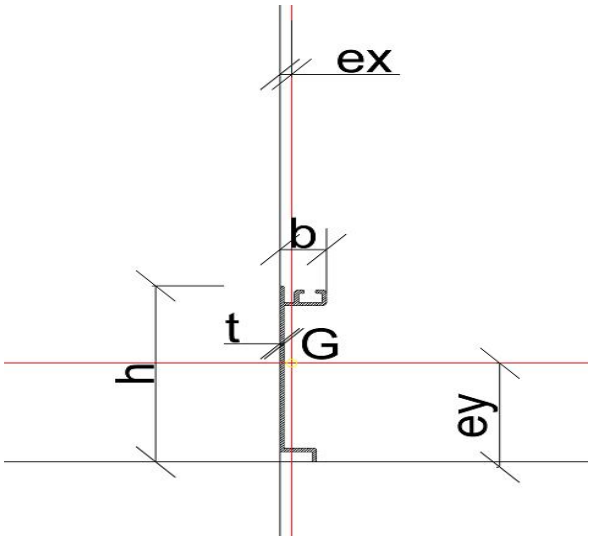

A	2.05
Ix	17.88
Iy	0.6
ex	0.45
ey	4.87
t	0.15
b	1.8
h	8.68
cx	1.35
cy	3.81

A: Area
ex: Center of gravity "X" distance
ey: Center of gravity "Y" distance
G:ex: Center of gravity "
b: maximum width
h:maximum height
t:Thickness
Ix:"x" direction moment of inertia
Iy:"y" direction moment of inertia
cx:Distance of end point to neutral axis in " x" direction
cy:Distance of end point to neutral axis in "y" direction

TYPE OF SUPPORT

PROFILE 7

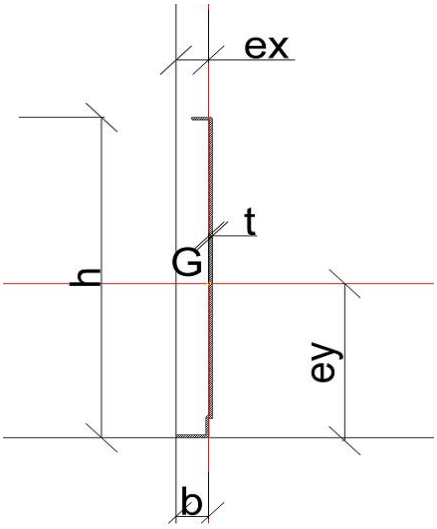

A	2.91
Ix	86.36
Iy	0.23
ex	1.58
ey	8.18
t	0.15
b	1.76
h	17
cx	0.18
cy	8.82

A: Area
ex: Center of gravity "X" distance
ey: Center of gravity "Y" distance
G:ex: Center of gravity "
b: maximum width
h:maximum height
t:Thickness
Ix:"x" direction moment of inertia
Iy:"y" direction moment of inertia
cx:Distance of end point to neutral axis in " x" direction
cy:Distance of end point to neutral axis in "y" direction

TYPE OF SUPPORT

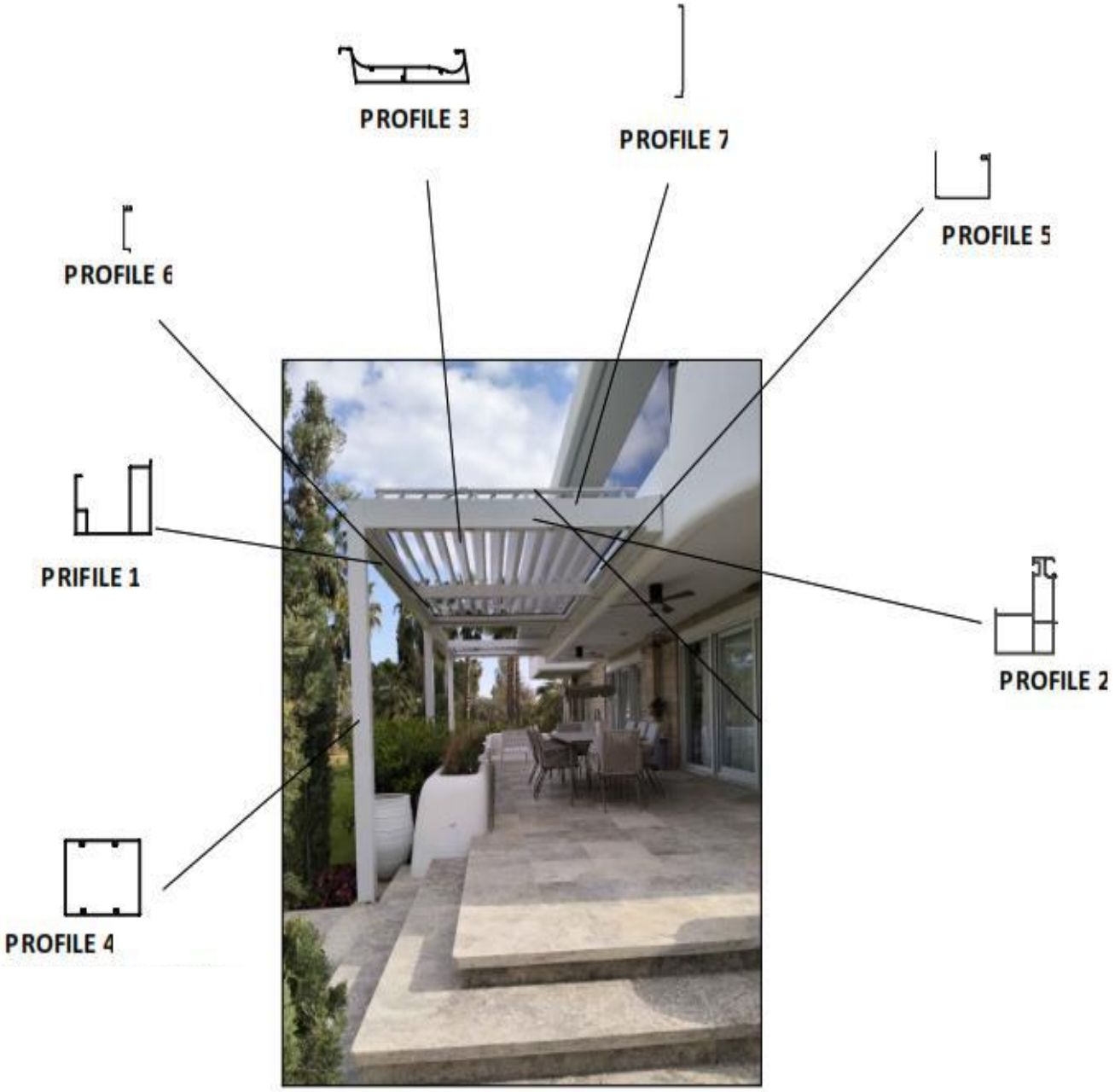

THE PROFILE 4 SHOULD BE RESOLVED AS A PRESSURE ROD AND THE SLIGHTNESS SHOULD BE CALCULATED

EXPLANATION: WHILE IN TURKEY, WE PRACTICALLY DO THE CALCULATIONS(BY IGNORING THE EARTHQUAKE FORCES).

COMBINATIONS: p=1,4g+1,6q
g: FIXED LOAD
q: MOVING LOAD (WIND AND ANY OTHER LOAD)

MOMENT CALCULATOR

BUILT IN BOTH ENDS			ONE END IS BUILT IN- ONE END IS ARTICULATED	
LOADING METHOD	$\overline{M}_{AB}$	$\overline{M}_{BA}$	LOADING METHOD	$\overline{M}_{AB}$
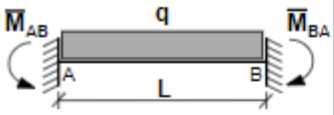	$\frac{q.L^2}{12}$	$\frac{q.L^2}{12}$	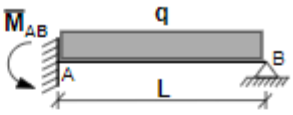	$\frac{q.L^2}{8}$
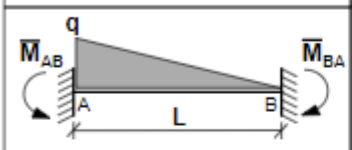	$\frac{q.L^2}{20}$	$\frac{q.L^2}{30}$	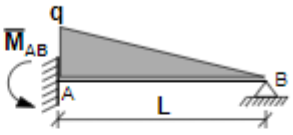	$\frac{2.q.L^2}{3}$
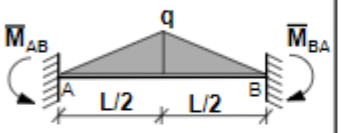	$\frac{5.q.L^2}{96}$	$\frac{5.q.L^2}{96}$	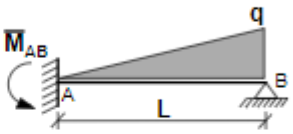	$\frac{7.q.L^2}{120}$
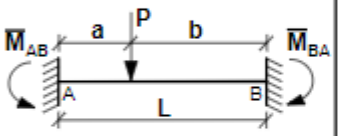	$\frac{P.a.b^2}{L^2}$	$\frac{P.b.a^2}{L^2}$	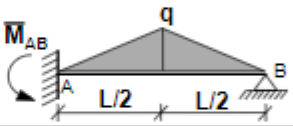	$\frac{5.q.L^2}{64}$
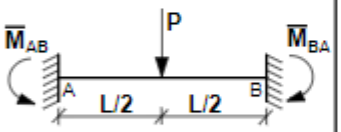	$\frac{P.L}{8}$	$\frac{P.L}{8}$	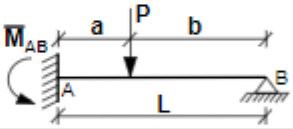	$\frac{Pab(L+b)}{2L^2}$
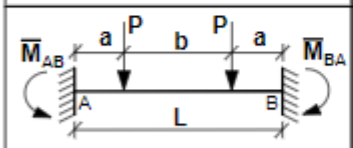	$\frac{Pa(L-a)}{L}$	$\frac{Pa(L-a)}{L}$	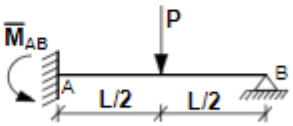	$\frac{3.P.L}{16}$
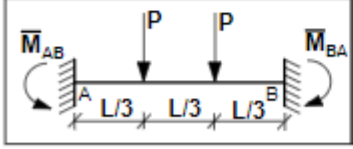	$\frac{2.P.L}{9}$	$\frac{2.P.L}{9}$	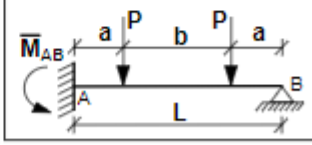	$\frac{3Pa(L-a)}{2.L}$

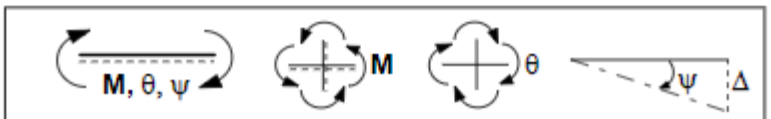

POSITIVE ASPECTS OF MOMENT

IT IS A RECOMMENDATION. THE VALID RESULTS WILL BE DETERMINED BY THE ENGINEERING SERVICE YOU RECEIVE FROM AN ENGINEER ACCORDING TO YOUR OWN STANDARDS AND REGULATIONS.